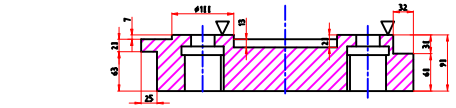

SEC. B-B

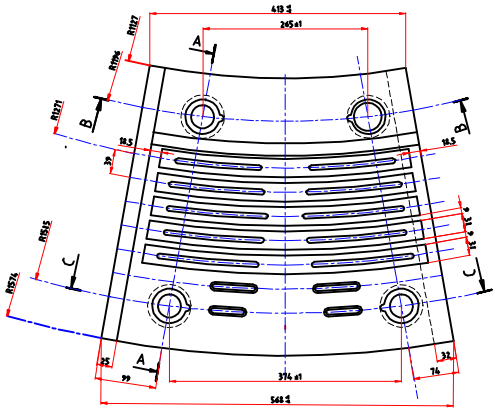

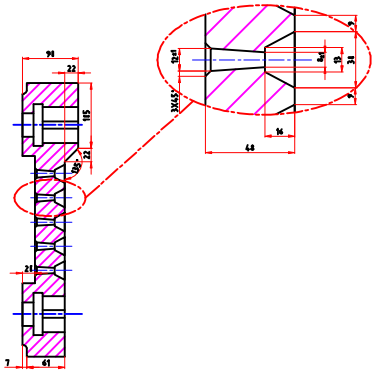

SEC. A-A

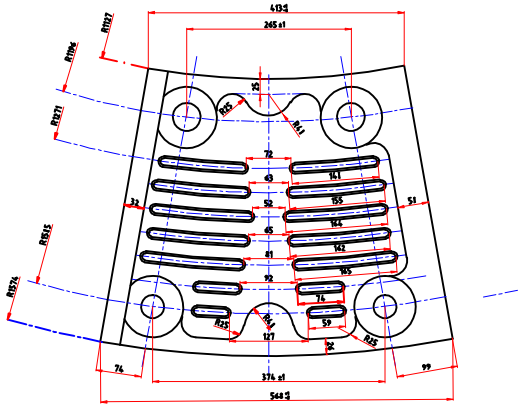

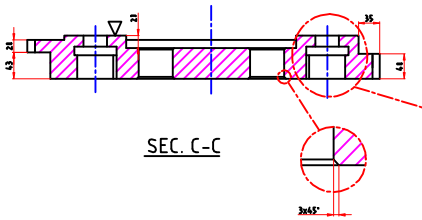

SEC. C-C

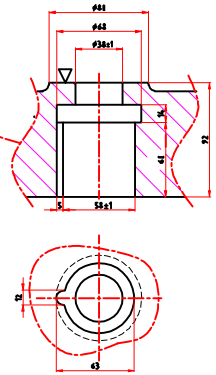

SAVEH WHITE CEMENT COMPANY			Unspecified Tolerances ISO 8062/CT12			
	Signature	Date	Drawing No. : EGNFCLAB03067A POS. 17	Part No. : _____	Quntity: _____	Title: PERIPHERAL GRATE
Dsgn.						
Drawn.	M.J.Ghasemi	89.05.15	Department : CEMENT MILL	Material: _____	Weight: 85.6 kg	Outlet diaphragm CEMENT MILL لاینر دیافراگم خروجی
Chk.						
App.						
Rev. 1			Adress File:			
Rev. 2			Sheet 1 of 1			
Rev. 3			Sclae : ____			

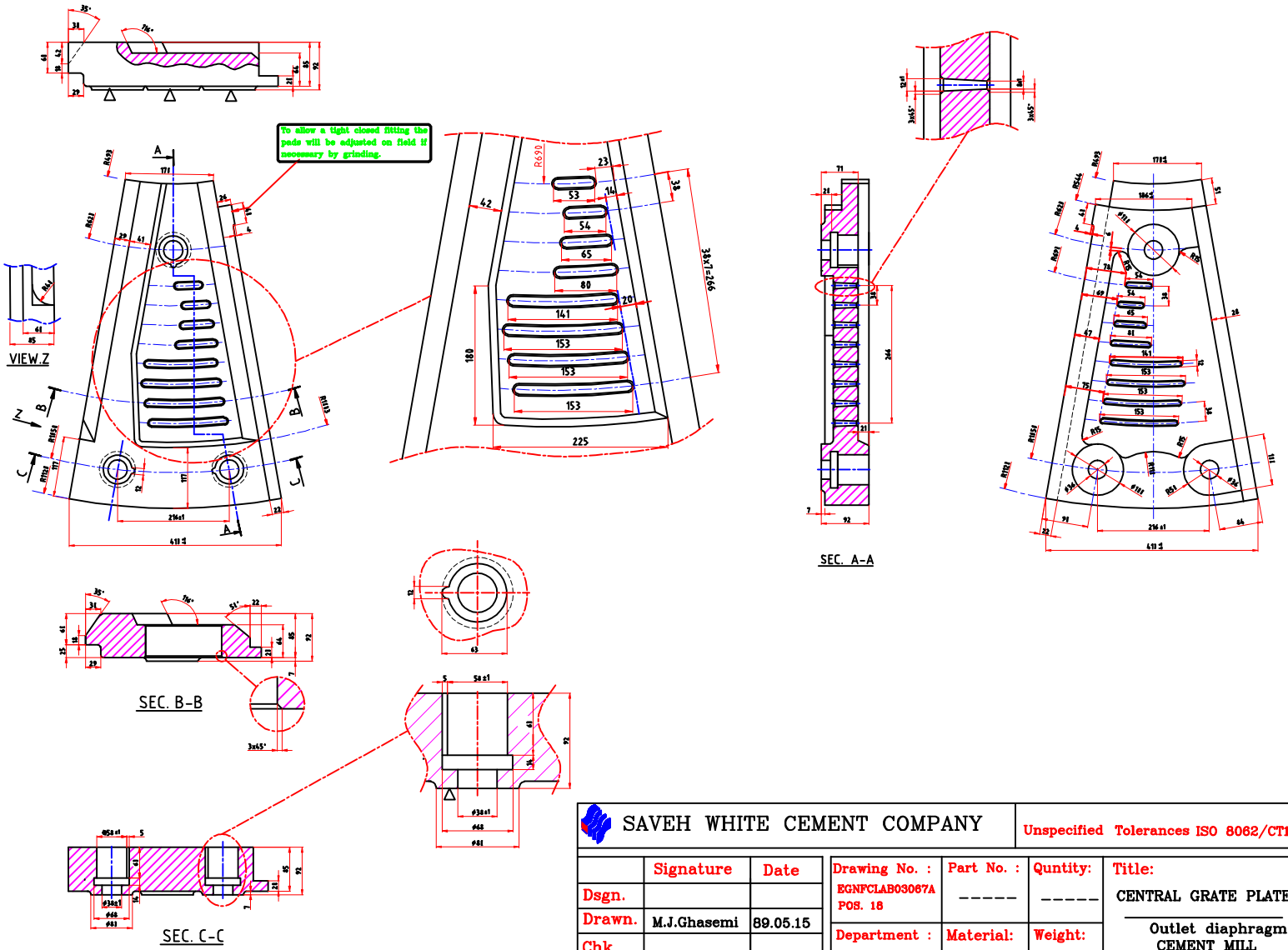

SAVEH WHITE CEMENT COMPANY			Unspecified Tolerances ISO 8062/CT12			
	Signature	Date	Drawing No. : EGNFCLAB03067A POS. 18	Part No. : -----	Quntity: -----	Title: CENTRAL GRATE PLATE
Dsgn.						Outlet diaphragm CEMENT MILL
Drawn.	M.J.Ghasemi	89.05.15	Department : CEMENT MILL	Material: -----	Weight: 76.9 kg	لاینر دیافراگم خروجی
Chk.						
App.						
Rev. 1			Adress File:			
Rev. 2			Sheet 1 of 1			
Rev. 3			Sclae : ----			

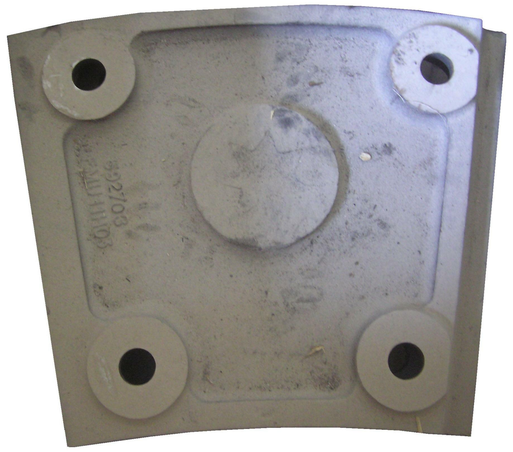

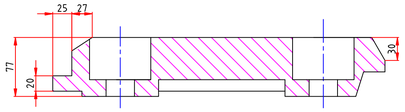

sec: A-A

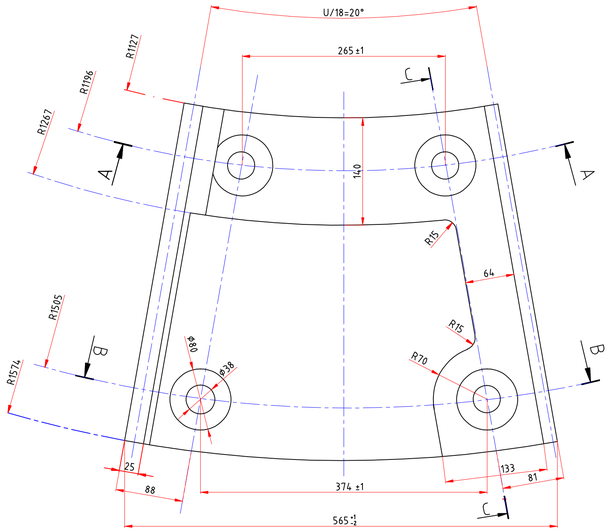

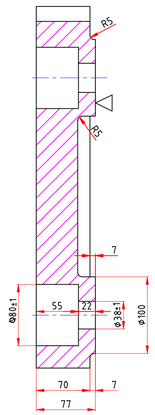

sec: C-C

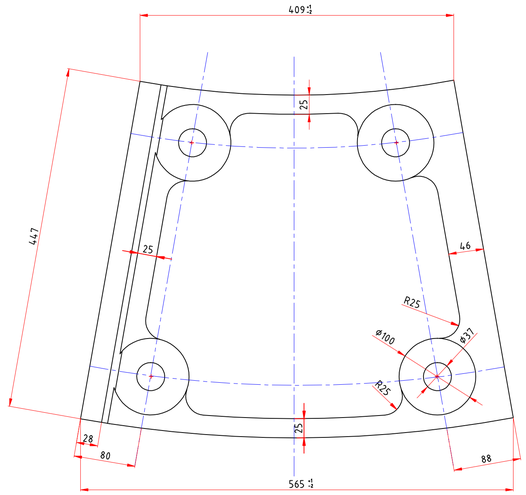

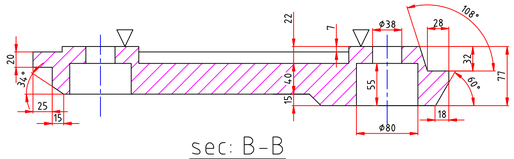

sec: B-B

SAVEH WHITE CEMENT COMPANY			Unspecified Tolerances medium DIN 7168			
	Signature	Date	Drawing No. : EGNFCLA03067A pos. 15	Part No. : ------	Quntity: 18	Title: PERIPHERAL BACK SIDE PLATE
Dsgn.	M.J.Ghasemi	89.05.15				
Drawn.	D.Emani	89.06.03				
Chk.	M.J.Ghasemi	89.06.10	Department : CEMENT MILL	Material: ------	Weight: 76.9 kg	Inlet diaphragm CEMENT MILL لاینر دیافراگم وسط سمت خانه دوم
App.						
Rev. 1			Adress File:			
Rev. 2			Sheet 1 of 1			
Rev. 3			Sclae : ----			

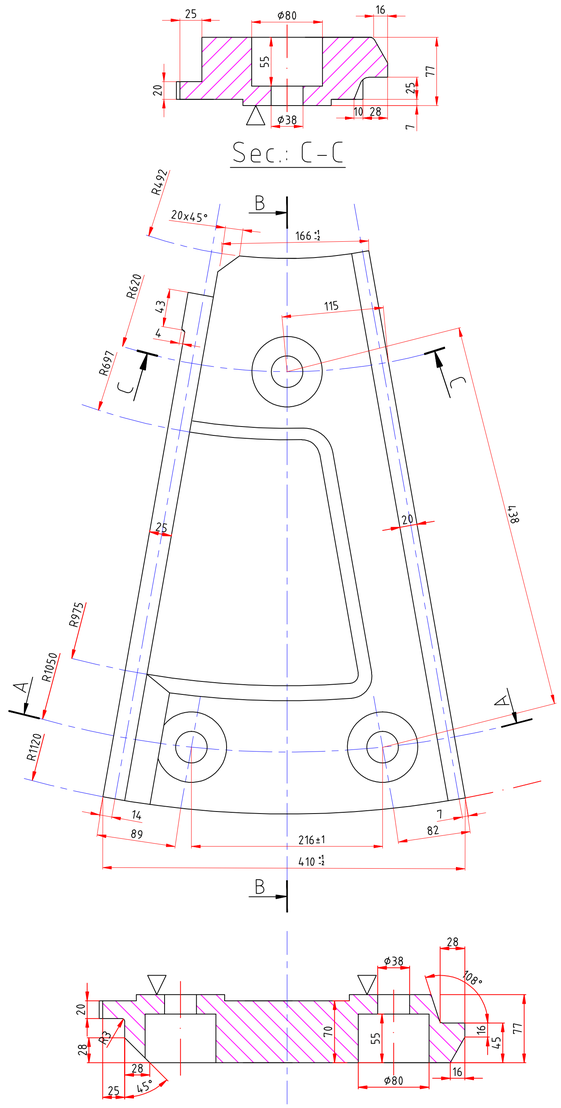

SAVEH WHITE CEMENT COMPANY			Unspecified Tolerances medium DIN 7168			
	Signature	Date	Drawing No. : EGNFCLA03067A pos. 17	Part No. : -----	Quntity: 18	Title: CENTRAL GRATE PLATE PLATE
Dsgn.	M.J.Ghasemi	89.05.15				
Drawn.	D.Emani	89.06.03				
Chk.	M.J.Ghasemi	89.06.10	Department : CEMENT MILL	Material: -----	Weight: 68.5 kg	Inlet diaphragm CEMENT MILL
App.						لاینر دیافراگم وسط سمت خانه دوم
Rev. 1			Adress File:			
Rev. 2			Sheet 1 of 1			
Rev. 3			Sclae : ----			

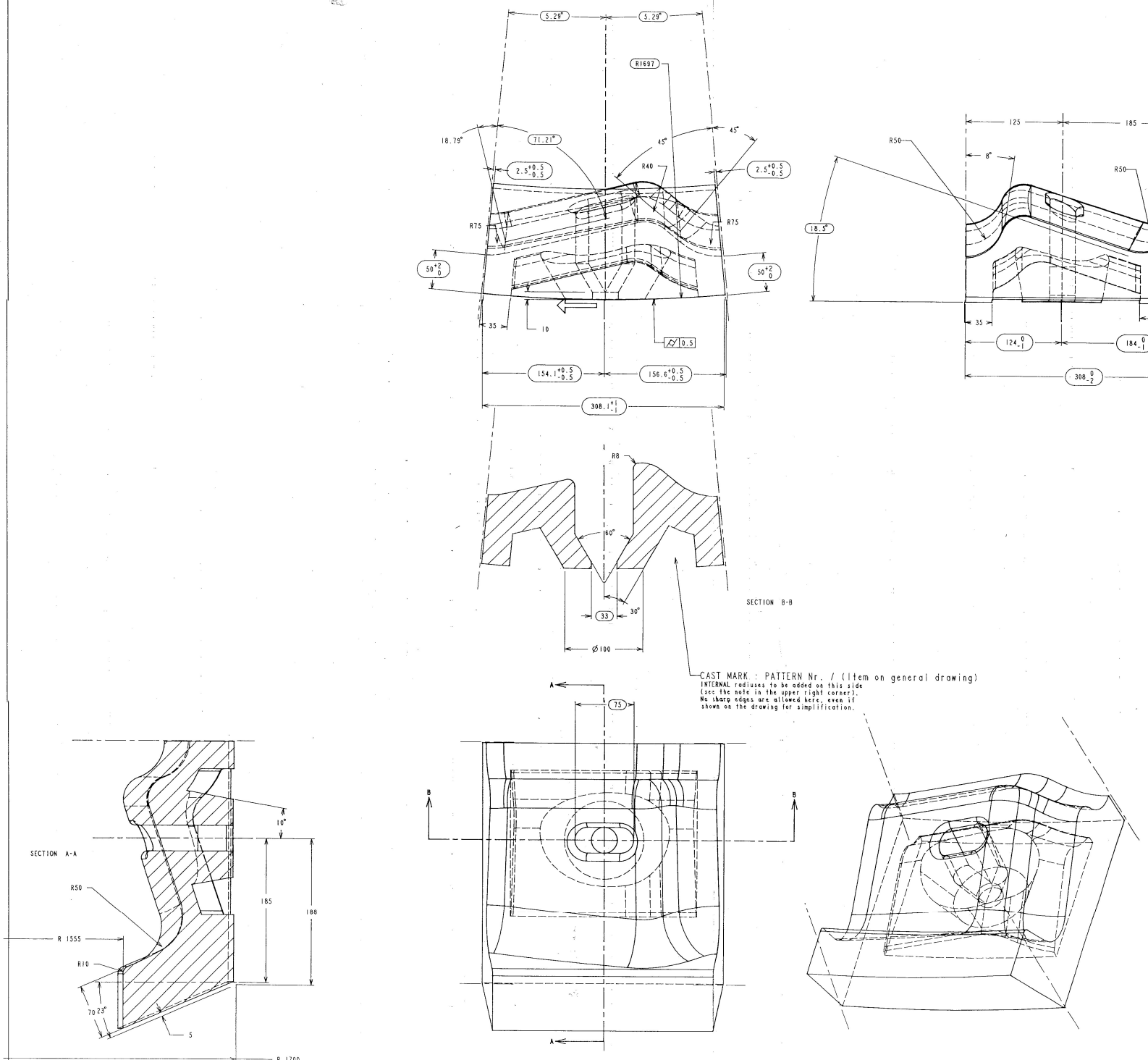

The non specified tolerances are:
For length distances : +/-2 mm,
For thicknesses : +3/-0 mm,
For angles (degrees) : +/-0.25
For bolt holes : +2/-0

Minimal thickness : 50 mm
measured perpendicularly to the
working surfaces.

Non mentioned EXTERNAL rad. must be R12

All foundry INTERNAL radiuses must be
defined by the founder, in order to
assure a proper casting feed.
They should be between R20 & R40.

A draft between 10 & 15 degrees must
be applied to the internal vertical
faces.

The setting face and the lateral and
radial faces must be checked with
gauges as per attached drawing.

Cast permanently the Pattern number
and the Item number on general drawing,
at the location shown in SECTION B-B.

The theoretical lifting slope is
15.00 degrees. The real angle
with the horizontal direction is
13.50 degrees.

The classifying slope is 18.50
degrees.

SAVEH WHITE CEMENT CO

ISLAMIC REPUBLIC OF IRAN

500 TPD WHITE CEMENT PLANT

RA = SURFACE ROUGHNESS

RA √ RUGOTEST LCA NF E 05-051

CLASS CLASSE	N 12M	11M	10M	9	8	7	6	5	4	3	2
RA IN MICRONS RA IN MICRONS	50	25	12.5	6.3	3.2	1.6	0.8	0.4	0.2	0.1	0.05

ROUGH AND FLAT SURFACE WITHOUT MACHINING OVERTHICKNESS
SURFACE BRUTE ET UNIE - SANS SURÉPAISSEUR D'USINAGE

LIMITS OF TOLERANCES FOR THE MACHINING DIMENSIONS WITHOUT PARTICULARS (IAU)

LIMITES DES TOLERANCES POUR LES COTES D'USINAGE SANS MENTION PARTICULIERE (IAU)

FROM DE	10 0	6	18	30	100	300	1000	3000	5000
	6	18	30	100	300	1000	3000	5000	
OUTSIDE D. EXT ±0	0.2	0.4	0.6	0.8	1.6	2.4	4.4	6.6
BORE ALESAGE ±0	0.2	0.4	0.6	0.8	1.6	2.4	4.4	6.6
LENGTH LONG. ±	0.1	0.2	0.3	0.4	0.8	1.2	2.2	3.3
ST DIST ENTR'AXE ±	0.1	0.2	0.3	0.4	0.8	1.2	2.2	3.3

IND REV	NBRE DE NBRE OF △	DATE	DESSINE DRAWN	VERIFIE CHECKED	VISE SIGNED	
G						
F						
E						
D						
C						
B						
A	.	. / /	.	.	.	.

THIS DRAWING IS THE PROPERTY OF FCB.
IT MUST NOT BE COPIED OR GIVEN TO OTHER PEOPLE WITHOUT FCB'S AGREEMENT
CE DESSIN EST LA PROPRIETE EXCLUSIVE DE FCB.
IL NE PEUT ETRE NI COPIE NI COMMUNIQUE A DES TIERS SANS AUTORISATION

تحت کنترل

GROUP 025 — PLANT: GRINDING MILL

ITEM 025-10 — EQUIPMENT: RAW MILL

MATERIAL MATIERE: .
MASS MASSE: .
PATTERN MODELE: .
REFERENCE: ALRCB-1309

SCALE ECHELLE: /

DRAWING TITLE/TITRE DU DESSIN: NORMAL BOLTED COMPARTEMENT - 1

	DATE	NAME/NOM
DRAWN DESSINE	30/11/93	ROUSSEL
CHECKED VERIFIE	30/11/93	
SIGNED VISE	1 12.93	

fcb GROUPE FIVES-LILLE
Etablissement de LILLE
Bd de l'Usine BP 2047 - 59015 LILLE CEDEX FRANCE - Tel (33)20.43.77.77

DEPART. DCI/BEC — DOCUMENT NUMBER NUMERO DE DOCUMENT — TYPE — CLIENT — ITEM

FORMAT A1 — DRAWING NUMBER/NUMERO DE DESSIN: S W C 2 1 7 2 6 3 2 7

	75 Kg			Pieces		
A2329	75 Kg		IN_646 FMU23	34 Pieces	5	
MODELE/PATTERN Nr.:	Poids unit. Unit weight		Matiere Material	Quantite par moyeu/ Quantity per mill	Repere sur plan d'ensemble Item on general drawing	

Ce plan est la propriete de ACTIC INDUSTRIE. Toute reproduction ou transmission a des tiers est interdite, meme pour consultation.

This drawing is property of ACTIC INDUSTRIE. Copy or transmission to any person, even for enquiries, is forbidden.

General dwg. Nr. AL-1315

ACTIC INDUSTRIE

SAVEH WHITE CEMENT CO
RAW MILL - BI-ROTATOR
DIA=3.4 M - L=8.376 M

LIFTING CLASSIFYING ACTILINER
NORMAL BOLTED - COMPARTMENT 1
CAMBIER Process - Exclusivity ACTIC Industrie

Echelle Scale	0.480
Dessine par Drawn by	PMC
Verifie par Checked by	BCA
Fichier File	AC_156_N ACB-01-N-11
Indice de Revision	- - - - -
Date creation	09/11/93
Date revision	-
FCB drawing No:	SWC 217 26 327
No de plan - Drawing No / Jeichn. Nr. - Plano No	ALRCB-1309

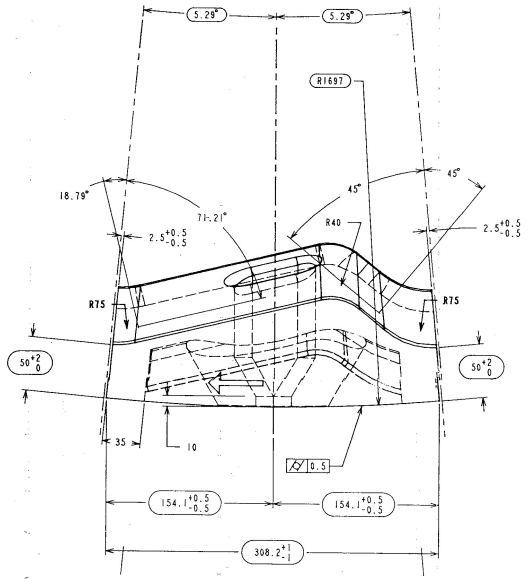

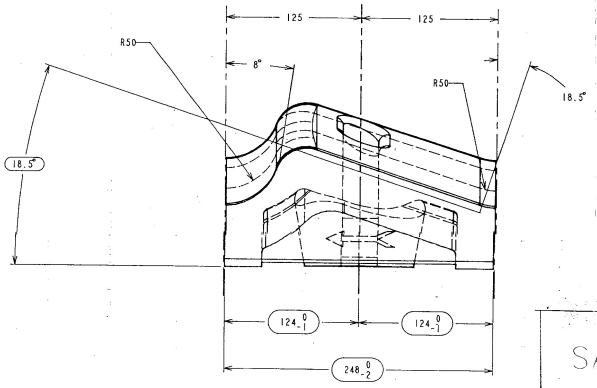

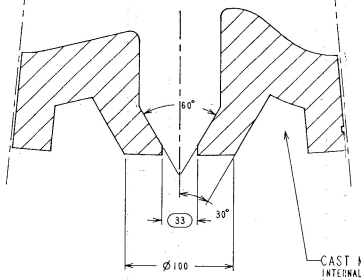

SECTION B-B

CAST MARK : A2330-IN646 / (Item on general drawing)
INTERNAL radiuses to be added on this side
(see the note in the upper right corner).
No sharp edges are allowed here, even if
shown on the drawing for simplification.

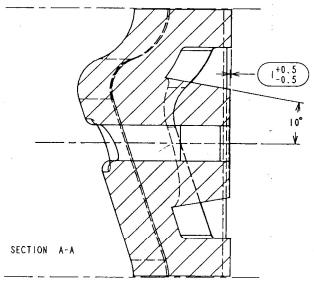

SECTION A-A

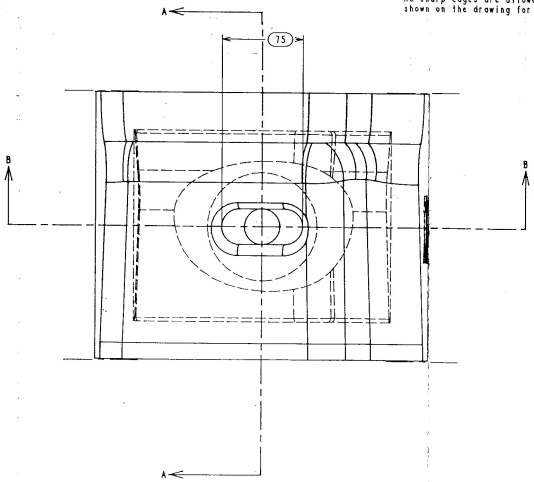

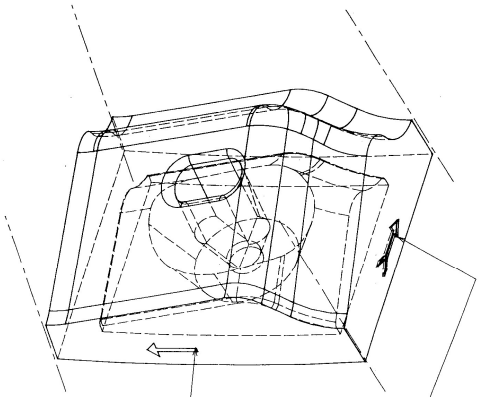

This arrow (not to cast) shows
the direction of the mill rotation.

CAST SUCH PERMANENT ARROW IN HOLLOW
SHOWING THE ORIENTATION OF THE PARTS
FROM INLET TOWARD OUTLET END OF THE
MILL COMPARTMENT.
(DIRECTION OF MATERIAL FLOW)

The non specified tolerances are:
For length distances : +/-2 mm,
For thicknesses : +3/-0 mm,
For angles (degrees) : +/-0.25
For bolt holes : +2/-0

Minimal thickness : 50 mm
measured perpendicularly to the
working surfaces.

Non mentioned EXTERNAL rad. must be R12

All foundry INTERNAL radiuses must be
defined by the founder, in order to
assure a proper casting feed.
They should be between R20 & R40.

A draft between 10 & 15 degrees must
be applied to the internal vertical
faces.

The setting face and the lateral and
radial faces must be checked with
gauges as per attached drawing.

Cast permanently the Pattern number
and the Item number on general drawing,
at the location shown in SECTION B-B.

The theoretical lifting slope is
15.00 degrees. The real angle
with the horizontal direction is
13.50 degrees.

The classifying slope is 18.50
degrees.

SAVEH WHITE CEMENT CO

ISLAMIC REPUBLIC OF IRAN

500 TPD WHITE CEMENT PLANT

RA = SURFACE ROUGHNESS

RA √ RUGOTEST LCA NF E 05-051

CLASS CLASSE	N 12	M 11	N 10	N 9	N 8	N 7	N 6	N 5	N 4	N 3	N 2
RA IN MICRONS RA EN MICRONS	50	25	12.5	6.3	3.2	1.6	0.8	0.4	0.2	0.1	0.05

ROUGH AND FLAT SURFACE WITHOUT MACHINING OVERTHICKNESS
SURFACE BRUTE ET UNIE - SANS SURÉPAISSEUR D'USINAGE

LIMITS OF TOLERANCES FOR THE MACHINING DIMENSIONS WITHOUT PARTICULARS (IAO)

LIMITES DES TOLERANCES POUR LES COTES D'USINAGE SANS MENTION PARTICULIERE (IAO)

FROM DE / TO A	0 / 6	6 / 30	30 / 100	100 / 300	300 / 1000	1000 / 2000	2000 / 6000
OUTSIDE D. EXT ±	0.2	0.4	0.6	0.8	1.6	2.4	4.4	6.6
BORE ALESAGE +/-	0.2	0.4	0.6	0.8	1.6	2.4	4.4	6.6
LENGTH LONG. +	0.1	0.2	0.3	0.4	0.8	1.2	2.2	3.3
CT. DIST. CENTR'AXE +	0.1	0.2	0.3	0.4	0.8	1.2	2.2	3.3

IND REV	NBRE DE MBER OF	DATE	DESSINE DRAWN	VERIFIE CHECKED	VISE SIGNED
G					
F					
E					
D					
C					
B					
A		/ /			

THIS DRAWING IS THE PROPERTY OF FCB.
IT MUST NOT BE COPIED OR GIVEN TO OTHER PEOPLE WITHOUT FCB'S AGREEMENT
CE DESSIN EST LA PROPRIETE EXCLUSIVE DE FCB.
IL NE PEUT ETRE NI COPIE NI COMMUNIQUE A DES TIERS SANS AUTORISATION

GROUP 025	PLANT: GRINDING MILL
ITEM 025-10	EQUIPMENT: RAW MILL
MATERIAL MATIERE	
MASS MASSE	
PATTERN MODELE	
REFERENCE	ALRCB - 1308
SCALE ECHELLE	/
DRAWING TITLE/TITRE DU DESSIN	NORMAL BOLTED COMPARTMENT 1

	DATE	NAME/NOM
DRAWN DESSINE	30/11/93	ROUSSEL
CHECKED VERIFIE	30/11/93	
SIGNED VISE	1 12.93	

GROUPE FIVES-LILLE
Etablissement de LILLE
Bd de l'Usine SP 2047 - 59015 LILLE CEDEX FRANCE - tél (33)20.43.77.77

DEPART.	DOCUMENT NUMBER / NUMERO DE DOCUMENT	TYPE	CLIENT	ITEM
DCI/BEC				

FORMAT A1 — DRAWING NUMBER/NUMERO DE DESSIN: SWC 217 26 325

A2330-CR12	52 Kg		CR-12 FMU11	204 Pieces	4	
A2330-IN646	52 Kg		IN_646 FMU23	161 Pieces	3	
MODELE/PATTERN Nr.:	Poids unit. Unit weight		Matiere Material	Quantite par broyeur Quantity per Mill	Repere sur plan d'ensemble (ou en general drawing)	

Ce plan est la propriete de ACTIC INDUSTRIE.
Toute reproduction ou transmission a des tiers
est interdite, meme pour consultation.

This drawing is property of ACTIC INDUSTRIE.
Copy or transmission to any person,
even for enquiries, is forbidden.

General dwg Nr AL-135

ACTIC INDUSTRIE

SAVEH WHITE CEMENT CO
RAW MILL - BI-ROTATOR
DIA=3.4 M - L=8.376 M

LIFTING CLASSIFYING ACTILINER
NORMAL BOLTED - COMPARTMENT 1
CAMBIER Process - Exclusivity ACTIC Industrie

Echelle Scale	0.400
Dessine par Drawn by	PMC
Verifie par Checked by	BCA
Fichier File	AC-136.M VCB-01.M
Indice de Revision	- - - - - -
Date creation	21/10/93
Date revision	-
FCB drawing No.	SWC 217 26 325
No du plan - Drawing No Intitule, Nr - Plans No	ALRCB-1308

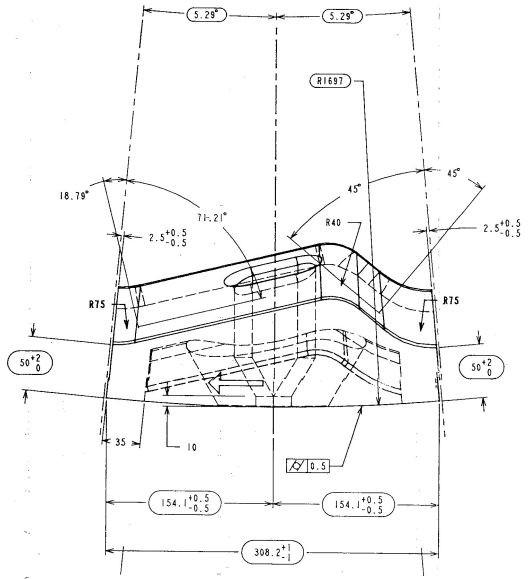

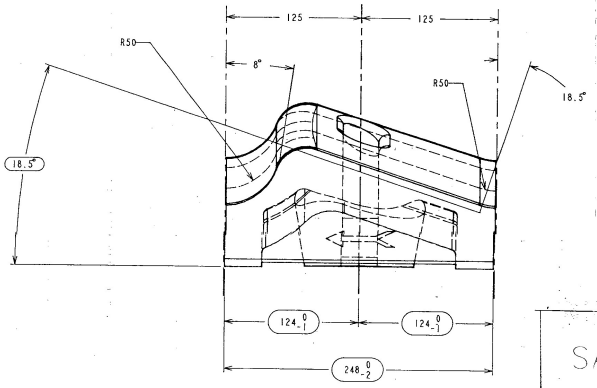

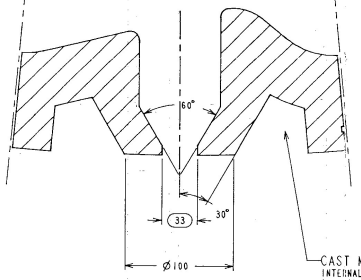

SECTION B-B

CAST MARK : A2330-IN646 / (Item on general drawing)
INTERNAL radiuses to be added on this side
(see the note in the upper right corner).
No sharp edges are allowed here, even if
shown on the drawing for simplification.

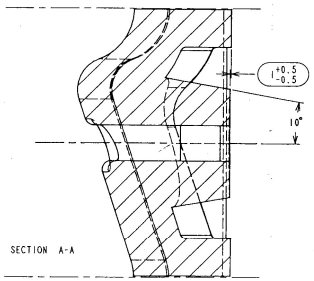

SECTION A-A

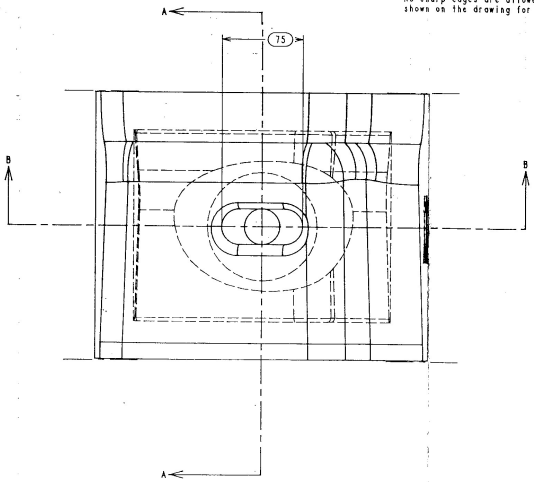

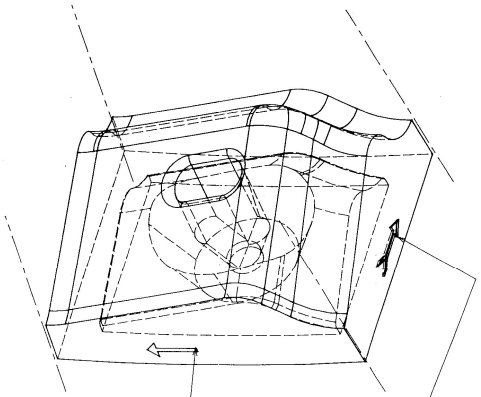

This arrow (not to cast) shows
the direction of the mill rotation.

CAST SUCH PERMANENT ARROW IN HOLLOW
SHOWING THE ORIENTATION OF THE PARTS
FROM INLET TOWARD OUTLET END OF THE
MILL COMPARTMENT.
(DIRECTION OF MATERIAL FLOW)

The non specified tolerances are:
For length distances : +/-2 mm,
For thicknesses : +3/-0 mm,
For angles (degrees) : +/-0.25
For bolt holes : +2/-0

Minimal thickness : 50 mm
measured perpendicularly to the
working surfaces.

Non mentioned EXTERNAL rad. must be R12

All foundry INTERNAL radiuses must be
defined by the founder, in order to
assure a proper casting feed.
They should be between R20 & R40.

A draft between 10 & 15 degrees must
be applied to the internal vertical
faces.

The setting face and the lateral and
radial faces must be checked with
gauges as per attached drawing.

Cast permanently the Pattern number
and the Item number on general drawing,
at the location shown in SECTION B-B.

The theoretical lifting slope is
15.00 degrees. The real angle
with the horizontal direction is
13.50 degrees.

The classifying slope is 18.50
degrees.

SAVEH WHITE CEMENT CO

ISLAMIC REPUBLIC OF IRAN

500 TPD WHITE CEMENT PLANT

RA = SURFACE ROUGHNESS

RA √ RUGOTEST LCA NF E 05-051

CLASS CLASSE	N 12	M 11	N 10	N 9	N 8	N 7	N 6	N 5	N 4	N 3	N 2
RA IN MICRONS RA EN MICRONS	50	25	12.5	6.3	3.2	1.6	0.8	0.4	0.2	0.1	0.05

ROUGH AND FLAT SURFACE WITHOUT MACHINING OVERTHICKNESS
SURFACE BRUTE ET UNIE - SANS SURÉPAISSEUR D'USINAGE

LIMITS OF TOLERANCES FOR THE MACHINING DIMENSIONS WITHOUT PARTICULARS (IAO)

LIMITES DES TOLERANCES POUR LES COTES D'USINAGE SANS MENTION PARTICULIERE (IAO)

FROM DE / TO A	0 / 6	6 / 30	30 / 100	100 / 300	300 / 1000	1000 / 2000	2000 / 6000
OUTSIDE D. EXT ±	0.2	0.4	0.6	0.8	1.6	2.4	4.4	6.6
BORE ALESAGE +/-	0.2	0.4	0.6	0.8	1.6	2.4	4.4	6.6
LENGTH LONG. +	0.1	0.2	0.3	0.4	0.8	1.2	2.2	3.3
CT. DIST. CENTR'AXE +	0.1	0.2	0.3	0.4	0.8	1.2	2.2	3.3

IND REV	NBRE DE MBER OF	DATE	DESSINE DRAWN	VERIFIE CHECKED	VISE SIGNED
G					
F					
E					
D					
C					
B					
A		/ /			

THIS DRAWING IS THE PROPERTY OF FCB.
IT MUST NOT BE COPIED OR GIVEN TO OTHER PEOPLE WITHOUT FCB'S AGREEMENT
CE DESSIN EST LA PROPRIETE EXCLUSIVE DE FCB.
IL NE PEUT ETRE NI COPIE NI COMMUNIQUE A DES TIERS SANS AUTORISATION

GROUP 025	PLANT: GRINDING MILL
ITEM 025-10	EQUIPMENT: RAW MILL
MATERIAL MATIERE	
MASS MASSE	
PATTERN MODELE	
REFERENCE	ALRCB - 1308
SCALE ECHELLE	/
DRAWING TITLE/TITRE DU DESSIN	NORMAL BOLTED COMPARTMENT 1

	DATE	NAME/NOM
DRAWN DESSINE	30/11/93	ROUSSEL
CHECKED VERIFIE	30/11/93	
SIGNED VISE	1 12.93	

GROUPE FIVES-LILLE
Etablissement de LILLE
Bd de l'Usine SP 2047 - 59015 LILLE CEDEX FRANCE - tél (33)20.43.77.77

DEPART.	DOCUMENT NUMBER / NUMERO DE DOCUMENT	TYPE	CLIENT	ITEM
DCI/BEC				

FORMAT A1 — DRAWING NUMBER/NUMERO DE DESSIN: SWC 217 26 325

A2330-CR12	52 Kg		CR-12 FMU11	204 Pieces	4	
A2330-IN646	52 Kg		IN_646 FMU23	161 Pieces	3	
MODELE/PATTERN Nr.:	Poids unit. Unit weight		Matiere Material	Quantite par broyeur Quantity per Mill	Repere sur plan d'ensemble (ou en general drawing)	

Ce plan est la propriete de ACTIC INDUSTRIE.
Toute reproduction ou transmission a des tiers
est interdite, meme pour consultation.

This drawing is property of ACTIC INDUSTRIE.
Copy or transmission to any person,
even for enquiries, is forbidden.

General dwg Nr AL-135

ACTIC INDUSTRIE

SAVEH WHITE CEMENT CO
RAW MILL - BI-ROTATOR
DIA=3.4 M - L=8.376 M

LIFTING CLASSIFYING ACTILINER
NORMAL BOLTED - COMPARTMENT 1
CAMBIER Process - Exclusivity ACTIC Industrie

Echelle Scale	0.400
Dessine par Drawn by	PMC
Verifie par Checked by	BCA
Fichier File	AC-136.M VCB-01.M
Indice de Revision	- - - - - -
Date creation	21/10/93
Date revision	-
FCB drawing No.	SWC 217 26 325
No du plan - Drawing No Intitule, Nr - Plans No	ALRCB-1308

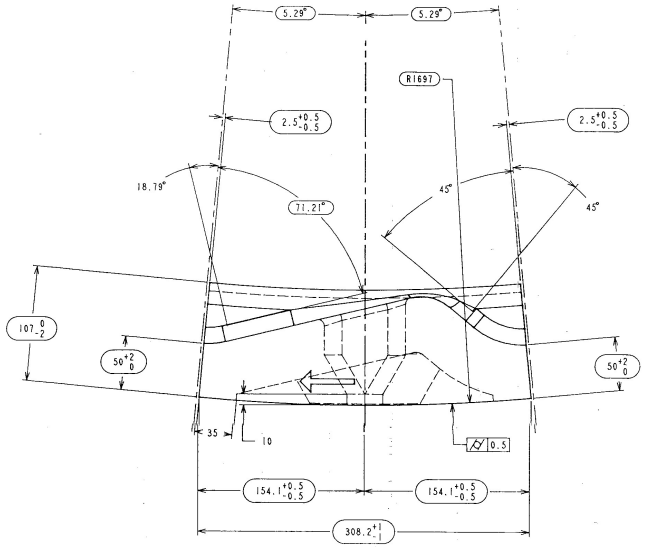

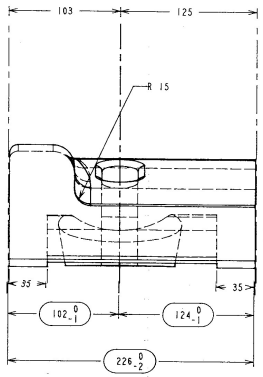

The non specified tolerances are:
For length distances : +/-2 mm,
For thicknesses : +3/-0 mm,
For angles (degrees) : +/-0.25
For bolt holes : +2/-0

Minimal thickness : 50 mm measured perpendicularly to the working surfaces.

Non mentioned EXTERNAL rad. must be R15

All foundry INTERNAL radiuses must be defined by the founder, in order to assure a proper casting feed. They should be between R20 & R40.

A draft between 10 & 15 degrees must be applied to the internal vertical faces.

The setting face and the lateral and radial faces must be checked with gauges as per attached drawing.

Cast permanently the Pattern number and the Item number on general drawing, at the location shown in SECTION B-B.

The theoretical lifting slope is 15.00 degrees. The real angle with the horizontal direction is 13.50 degrees.

The classifying slope is 18.50 degrees.

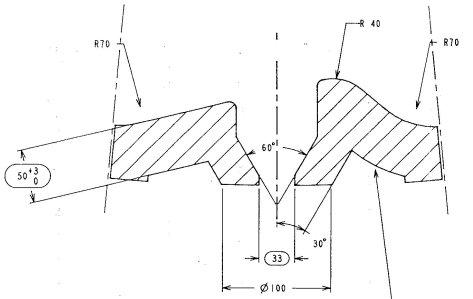

SECTION B-B

CAST MARK : PATTERN Nr. / (Item on general drawing)
INTERNAL radiuses to be added on this side (see the note in the upper right corner).
No sharp edges are allowed here, even if shown on the drawing for simplification.

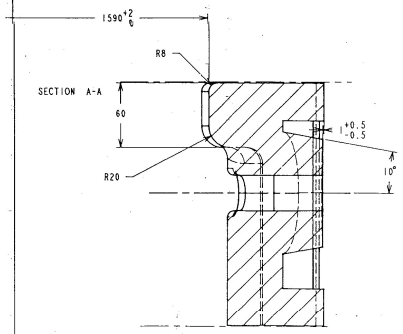

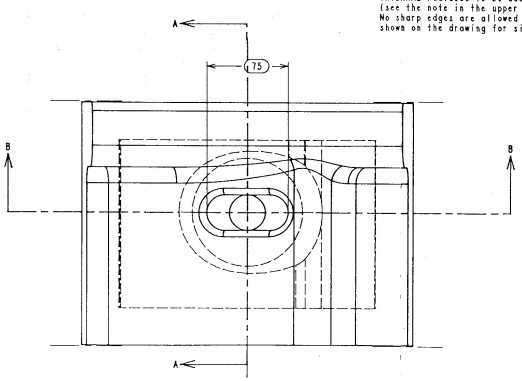

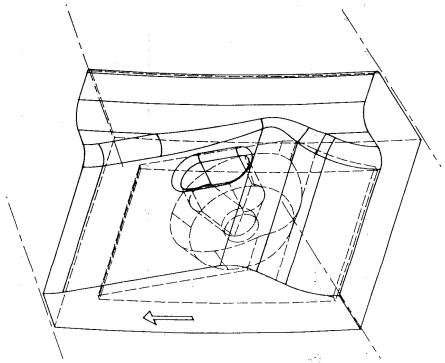

SAVEH WHITE CEMENT CO

ISLAMIC REPUBLIC OF IRAN

500 TPD WHITE CEMENT PLANT

RA = SURFACE ROUGHNESS

RA √ RUGOTEST LCA NF E 05-051

CLASS CLASSE	N 12	N 11	N 10	N 9	N 8	N 7	N 6	N 5	N 4	N 3	N 2
RA IN MICRONS RA EN MICRONS	50	25	12.5	6.3	3.2	1.6	0.8	0.4	0.2	0.1	0.05

ROUGH AND FLAT SURFACE WITHOUT MACHINING OVERTHICKNESS
SURFACE BRUTE ET UNIE - SANS SURPAISSEUR D'USINAGE

LIMITS OF TOLERANCES FOR THE MACHINING DIMENSIONS WITHOUT PARTICULARS (MM)
LIMITES DES TOLERANCES POUR LES COTES D'USINAGE SANS MENTION PARTICULIERE (MM)

FROM DE	0 A	10 A	18 A	30 A	100 A	300 A	1000 A	2000 A	4000 A
EXTERIOR EXT.	+0 -	0.2	0.4	0.6	0.8	1.6	2.4	4.4	6.6
BORE ALESAGE	+0 -	0.2	0.4	0.6	0.8	1.6	2.4	4.4	6.6
LENGTH LONG.	+ -	0.1	0.2	0.3	0.4	0.8	1.2	2.2	3.3
CT DIST. ENTR'AXE	+ -	0.1	0.2	0.3	0.4	0.8	1.2	2.2	3.3

IND REV	NBRE DE MBER OF △	DATE	DESSINE DRAWN	VERIFIE CHECKED	VISE SIGNED
G					
F					
E					
D					
C					
B					
A		/ /			

THIS DRAWING IS THE PROPERTY OF FCB.
IT MUST NOT BE COPIED OR GIVEN TO OTHER PEOPLE WITHOUT FCB'S AGREEMENT
CE DESSIN EST LA PROPRIETE EXCLUSIVE DE FCB.
IL NE PEUT ETRE NI COPIE NI COMMUNIQUE A DES TIERS SANS AUTORISATION

GROUP 025 — PLANT: GRINDING MILL

ITEM 025-10 — EQUIPMENT: RAW MILL

MATERIAL MATIERE:
MASS MASSE:
PATTERN MODELE:
REFERENCE: ALRB 1314

SCALE ECHELLE: /

DRAWING TITLE/TITRE DU DESSIN: SPECIAL LAST CIRCLE BOLTED COMPARTMENT 1

	DATE	NAME/NOM
DRAWN DESSINE	30/11/93	ROUSSEL
CHECKED VERIFIE	30/11/93	Fichet
SIGNED VISE	1.12.93	Bernard

GROUPE FIVES-LILLE
Etablissement de LILLE
Bd de l'Usine SP 2047 - 59015 LILLE CEDEX FRANCE - Tel (33)20.43.77.77

DEPART. DCI/BEC — DOCUMENT NUMBER NUMERO DE DOCUMENT — TYPE — CLIENT — ITEM

FORMAT A1 — DRAWING NUMBER/NUMERO DE DESSIN: S W C 2 1 7 2 6 3 2 9

	40 Kg			Pieces	
A2331	40 Kg		CR-12 FMU11	34 Pieces	9
MODELE/PATTERN Nr.:	Poids unit. Unit weight		Matiere Material	Quantite par broyeur Quantity per mill	Repere sur plan d'ensemble (Item on general drawing)

Ce plan est la propriete de ACTIC INDUSTRIE. Toute reproduction ou transmission a des tiers est interdite, meme pour consultation.

This drawing is property of ACTIC INDUSTRIE. Copy or transmission to any person, even for enquiries, is forbidden.

General dwg Nr AL-1315

ACTIC INDUSTRIE

SAVEH WHITE CEMENT CO
RAW MILL - BI-ROTATOR
DIA=3.4 M - L=8.376 M

LIFTING ACTILINER
SPECIAL LAST CIRCLE - BOLTED - COMPARTMENT 1
CAMBIER Process - Exclusivity ACTIC Industrie

Echelle Scale: 0.400
Dessine par Drawn by: PME
Verifie par Checked by: BCA
Fichier File: WC_1314_A 88-11-10-12
Indice de Revision: - - - - -

Date creation: 10/11/93
Date revision:
FCB drawing No: SWC 217 26 329
No. du plan - Drawing No Zeichn. Nr - Plano No: ALRB-1314

Profil renforce par rayon R 160 sur la porte

Reinforced profile with radius R 160 on manhole door

Profil d'origine (piece standard)

Original profile (standard piece)

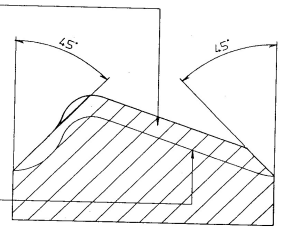

SECTION A–A

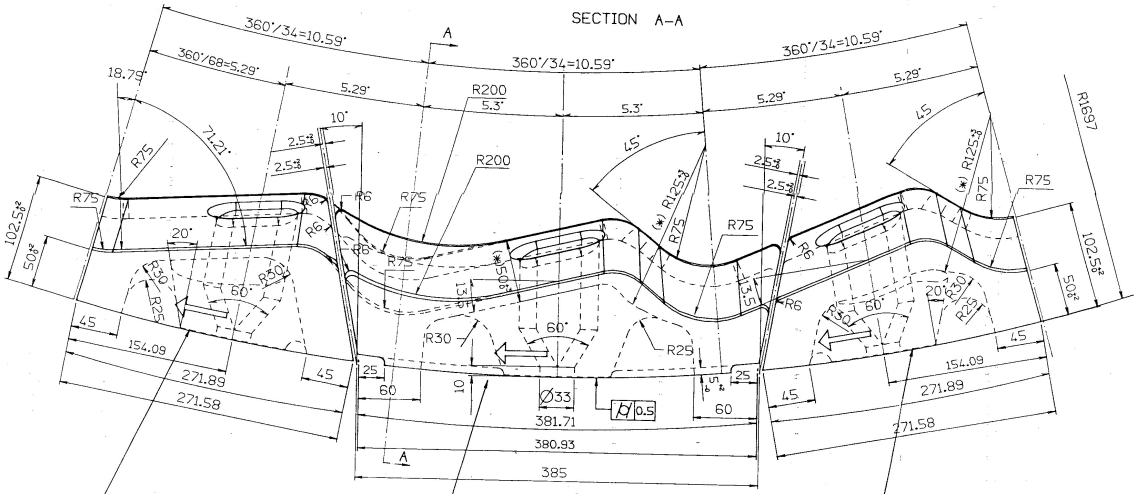

The not specified tolerances are:
For lenght distances : +2/-2 mm
For thicknesses : +3/-0 mm
For angles (degrees) +/-0.25
For bolts holes : +2/-0

Minimal thickness ≥50 mm measured perpendicularly to the working surfaces.

Non mentioned EXTERNAL rad. must be R12

All foundry INTERNAL radiuses must be defined by the founder.In order to assure a proper casting feed. They should be between R20 & R40.

A draft between 10 & 15 degrees must be applied to the internal vertical faces.

The setting face and the lateral and radial faces must be checked with the gauges as per attached drawing.

Cast permanently the Pattern number and the Item number on general drawing on the internal surface.

The theoretical lifting slope is 15.00 deg. The real angle with the horizontal direction is 13.50 degrees.

The classifying slope is 18.50 degrees.

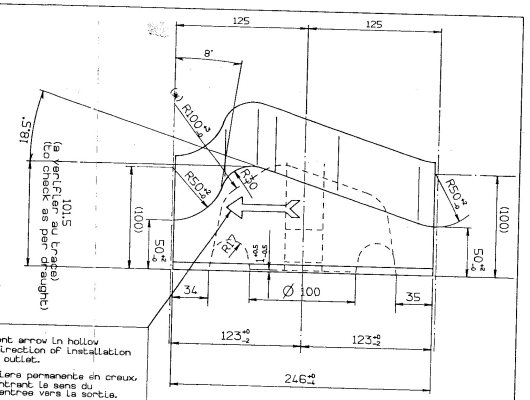

Cast permanent arrow in hollow showing the direction of installation from inlet to outlet.

Couler de maniere permanente en creux une Fleche montrant le sens du montage de l'entree vers la sortie.

IMPORTANT NOTE : Cast this arrow on each of the three items of this drawings.

NOTE IMPORTANTE : Couler cette Fleche sur chacun des trois repères de ce plan.

SENS D'ECOULEMENT DE LA MATIERE
DIRECTION OF MATERIAL FLOW

SENS DE ROTATION DU BROYEUR
DIRECTION OF MILL ROTATION

PLEASE REFER TO THE PATTERN NUMBER A2330 (FCB drawing No. SWC 217 26 325) FOR THE NON MENTIONED DIMENSIONS RELATED TO THE ORIGINAL PROFILE OF THE WORKING SURFACES.

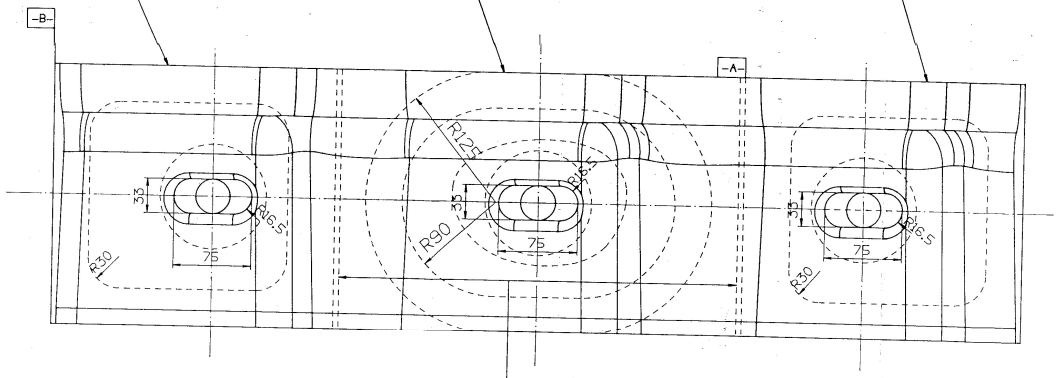

VUE DE DESSUS (DEVELOPPEE)
TOP VIEW (DEVELOPED)

⊥ 1 A // 1 B

Les dimensions (*) 50±, (*) R100 ... sont a considerer comme l'epaisseur minimum de matiere mesuree perpendiculairement a la face de travail.

The dimensions (*) 50±, (*) R100 ... are to be considered as the minimum thickness of material measured at right angle to the working face.

SAVEH WHITE CEMENT CO

ISLAMIC REPUBLIC OF IRAN

500 TPD WHITE CEMENT PLANT

RA = SURFACE ROUGHNESS

RA √ RUGOTEST LCA NF E 05-051

LIMITES DE TOLERANCES POUR LES DIMENSIONS SANS MENTION PARTICULIERE (MM)

CLASS CLASSE	K 12N	11N	10N	9	N 8	N 7	N 6	N 5	N 4	N 3	N 2
RA IN MICRONS RA EN MICRONS	50	25	12.5	6.3	3.2	1.6	0.8	0.4	0.2	0.1	0.05

ROUGH AND FLAT SURFACE WITHOUT MACHINING OVERTHICKNESS
SURFACE BRUTE ET UNIE - SANS SURPAISSEUR D'USINAGE

ITEM DIM.	0	3	6	30	120	400	1000	2000	4000
	3	6	30	120	400	1000	2000	4000	
OUTSIDE DIM. EXT	±	0.2	0.4	0.6	0.8	1.6	2.4	4.4	6.6
HOLE DIM. ALESAGE	±	0.2	0.4	0.6	0.8	1.6	2.4	4.4	6.6
LENGTH LONG.	±	0.1	0.2	0.3	0.4	0.8	1.2	2.2	3.3
ANGLE ANGLE	±	0.1	0.2	0.3	0.4	0.8	1.2	2.2	3.3

IND REV	MODIFIE DE MODIFIED BY	DATE	DESSINE DRAWN	VERIFIE CHECKED	VISE SIGNED	
G						
F						
E						
D						
C						
B						
A		/ /				

THIS DRAWING IS THE PROPERTY OF FCB
IT MUST NOT BE COPIED OR GIVEN TO OTHER PEOPLE WITHOUT FCB'S AGREEMENT
CE MODELE EST LA PROPRIETE DE FCB
IL NE PEUT ETRE NI COPIE NI COMMUNIQUE A DES TIERS SANS AUTORISATION

تحت كنترل

GROUP 025	PLANT: GRINDING MILL
ITEM 025-10	EQUIPMENT: RAW MILL
MATERIAL MATIERE	
MASS MASSE	
PATTERN MODELE	
REFERENCE	ALRCB-1310
SCALE ECHELLE	/
DRAWING TITLE/TITRE DU DESSIN	SPECIAL LINERS ON & AROUND MANHOLE COMP.1

	DATE	NAME/NOM
DRAWN DESSINE	30/11/93	ROUSSEL
CHECKED VERIFIE	30.11.93	
SIGNED VISE	1.12.93	

FCB GROUPE FIVES-LILLE
Etablissement de LILLE
BP 66 de l'Usine SP 2047 - 59015 LILLE CEDEX FRANCE - Tel (33)20.43.77.77

DEPART DEI /BEC	DOCUMENT NUMBER NUMERO DE DOCUMENT	TYPE	CLIENT	ITEM	
FORMAT A1	DRAWING NUMBER/NUMERO DE DESSIN	S W C	2 1 7 2 6 3 2 8		

REFERENCE ON INSTALATION DWG.No.AL-1315 : Pos 6,7,8

MODELE/PATTERN Nr:	Poids unit. Unit weight	Matiere Material		Quantite Quantity	Repere Item
A2334	48 Kg	IN-646 FMU23		3 pieces	8
A2333	60 Kg	IN-646 FMU23		3 pieces	7
A2332	48 Kg	IN-646 FMU23		3 pieces	6

Ce plan est la propriete d'ACTIC INDUSTRIE. Toute reproduction ou transmission a des tiers est interdite, meme pour consultation.

This drawing is the property of ACTIC INDUSTRIE. Copy or transmission to any person, even for enquiries, is forbidden.

A C T I C INDUSTRIE

SAVEH WHITE CEMENT CO.
RAW MILL – BI-ROTATOR
DIA=3.4 M – L=8.376 M

Lifting classifying ACTILINER
Special liners on & around manhole comp. 1
CAMBIER Process–Exclusivity ACTIC INDUSTRIE

Echelle Scale	1/2.5
Dessine par Drawn by	GF
Verifie par Checked by	PME
Fichier File	RCB-1310
Indice Revision	- - - - - - -
Date Revision	17/11/93
FCB Drawing No:	SWC 217 26 328
No du plan Drawing No	ALRCB-1310

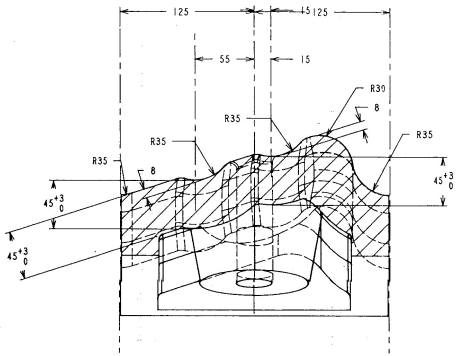

SECTION G-G

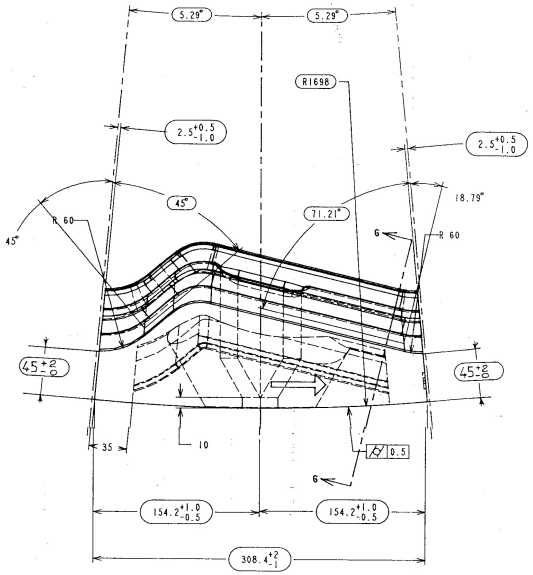

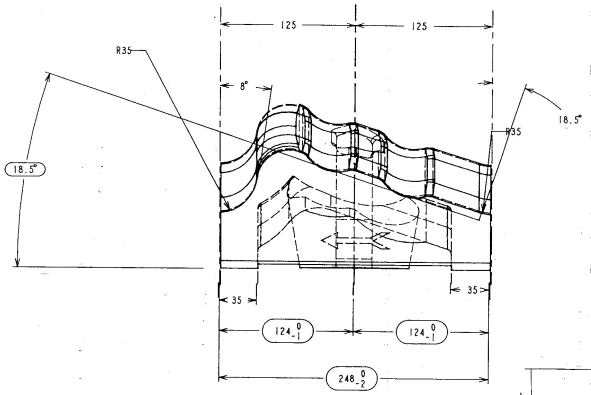

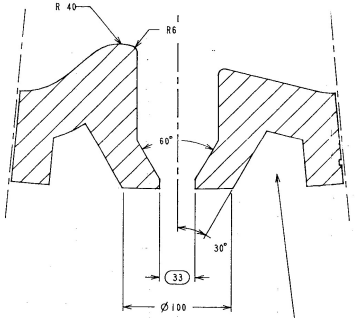

SECTION B-B

CAST MARK : PATTERN Nr. / (Item on general drawing)
INTERNAL radiuses to be added on this side
(see the note in the upper right corner).
No sharp edges are allowed here, even if
shown on the drawing for simplification.

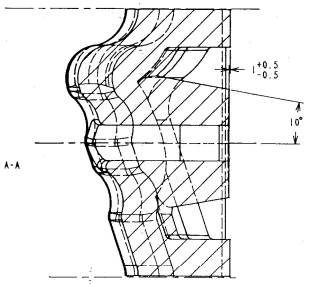

SECTION A-A

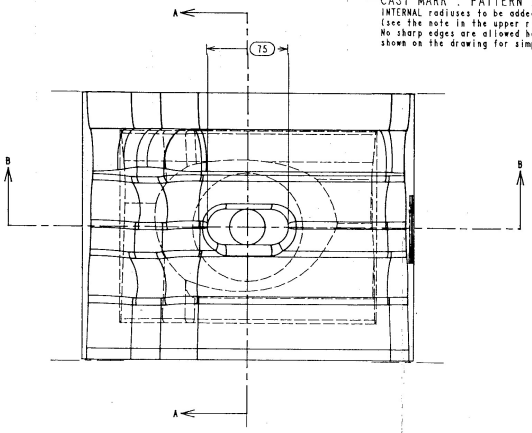

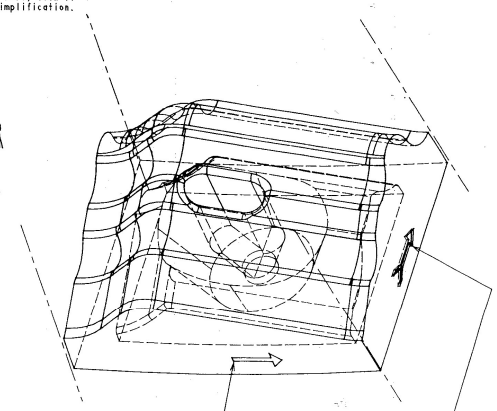

This arrow (not to cast) shows the direction of the mill rotation.

CAST SUCH PERMANENT ARROW IN HOLLOW SHOWING THE ORIENTATION OF THE PARTS FROM INLET TOWARD OUTLET END OF THE MILL COMPARTMENT.
(DIRECTION OF MATERIAL FLOW)

The non specified tolerances are:
For length distances : +/-2 mm,
For thicknesses : +3/-0 mm,
For angles (degrees) : +/-0.25
For bolt holes : +2/-0

Minimal thickness : 45 mm measured perpendicularly to the working surfaces.

Non mentioned EXTERNAL rad. must be R12

All foundry INTERNAL radiuses must be defined by the founder, in order to assure a proper casting feed. They should be between R20 & R40.

A draft between 10 & 15 degrees must be applied to the internal vertical faces.

The setting face and the lateral and radial faces must be checked with gauges as per attached drawing.

Cast permanently the Pattern number and the Item number on general drawing, at the location shown in SECTION B-B.

The theoretical lifting slope is 15.00 degrees. The real angle with the horizontal direction is 13.50 degrees.

The classifying slope is 18.50 degrees.

SAVEH WHITE CEMENT CO

ISLAMIC REPUBLIC OF IRAN

500 TPD WHITE CEMENT PLANT

RA = SURFACE ROUGHNESS

RA √ RUGOTEST LCA NF E 05-051

LIMITS OF TOLERANCES FOR THE MACHINING DIMENSIONS WITHOUT PARTICULARS (IM)

LIMITES DES TOLERANCES POUR LES COTES D'USINAGE SANS MENTION PARTICULIERE (IM)

		FROM 0 TO 6	6 / 30	30 / 100	100 / 300	300 / 1000	1000 / 2000	2000 / 4000
OUTSIDE D. EXT	+0	0.2	0.4	0.6	0.8	1.6	2.4	4.4	6.6
BORE ALESAGE	+0	0.2	0.4	0.6	0.8	1.6	2.4	4.4	6.6
LENGTH LONG.	±	0.1	0.2	0.3	0.4	0.8	1.2	2.2	3.3
CT DIST. ENTR'AXE	±	0.1	0.2	0.3	0.4	0.8	1.2	2.2	3.3

CLASS CLASSE	N 12	N 11	N 10	N 9	N 8	N 7	N 6	N 5	N 4	N 3	N 2
RA EN MICRONS RA EN MICRONS	50	25	12.5	6.3	3.2	1.6	0.8	0.4	0.2	0.1	0.05

ROUGH AND FLAT SURFACE WITHOUT MACHINING OVERTHICKNESS
SURFACE BRUTE ET UNIE - SANS SURÉPAISSEUR D'USINAGE

IND REV	NBRE DE NBER OF	DATE	DESSINE DRAWN	VERIFIE CHECKED	VISE SIGNED
G					
F					
E					
D					
C					
B					
A		/ /			

THIS DRAWING IS THE PROPERTY OF FCB.
IT MUST NOT BE COPIED OR GIVEN TO OTHER PEOPLE WITHOUT FCB'S AGREEMENT
CE DESSIN EST LA PROPRIETE EXCLUSIVE DE FCB.
IL NE PEUT ETRE NI COPIE NI COMMUNIQUE A DES TIERS SANS AUTORISATION

تحت کنترل

GROUP 025 — PLANT: GRINDING MILL

ITEM 025-10 — EQUIPMENT: RAW MILL

MATERIAL MATIERE:
MASS MASSE:
PATTERN MODELE:
REFERENCE: ALRCPB-1311

SCALE ECHELLE: /

DRAWING TITLE/TITRE DU DESSIN: NORMAL BOLTED COMPARTMENT 2

	DATE	NAME/NOM
DRAWN DESSINE	30/11/93	ROUSSEL
CHECKED VERIFIE	30.11.93	Edele
SIGNED VISE	1.12.93	Bernard

fcb GROUPE FIVES-LILLE
Etablissement de LILLE
Bd de l'Usine BP 2047 - 59015 LILLE CEDEX FRANCE- Tel (33)20.43.77.77

DEPART. DCI/BEC — DOCUMENT NUMBER NUMERO DE DOCUMENT — TYPE — CLIENT — ITEM

FORMAT A1 — DRAWING NUMBER/NUMERO DE DESSIN: SWC 217 26 330

	47 Kg			Pieces	
A2335	47 Kg		CR-12 FMU11	501 Pieces	10
MODELE/PATTERN Nr.:	Poids unit. Unit weight		Matiere Material	Quantite par broyeur Quantity per mill	Repere sur plan d'ensemble Item on general drawing

Ce plan est la propriete de ACTIC INDUSTRIE. Toute reproduction ou transmission a des tiers est interdite, meme pour consultation.

This drawing is property of ACTIC INDUSTRIE. Copy or transmission to any person, even for enquiries, is forbidden.

General dwg Nr. AL-135

ACTIC INDUSTRIE

SAVEH WHITE CEMENT CO
RAW MILL - BI-ROTATOR
DIA=3.4 M - L=8.376 M

LIFTING CLASSIFYING ACTILINER WITH TRACKS
NORMAL BOLTED - COMPARTMENT 2
CAMBIER Pneuas - Exclusivity ACTIC industrie

Echelle Scale	1:400
Dessine par Drawn by	PME
Verifie par Checked by	BCA
Fichier File	RC_150_R KCPB-82-A
Indice de Revision	- - - - -

Date creation	21/10/93	FCB drawing No: SWC 217 26 330	No. de plan. - Drawing No. Zeichn. Nr. - Plano No. ALRCPB-1311
Date revision	-		

The non specified tolerances are:
For length distances : +/-2 mm,
For thicknesses : +3/-0 mm,
For angles (degrees) : +/-0.1
For bolt holes : +2/-0 mm.

These parts have curved faces, and have to be installed on a conical support !

Check the outer contour and the position of the bolt holes with respect to this contour, with the help of a wooden gauge comprising 30mm dia. pins fixed on this gauge at the theoretical bolt holes locations.

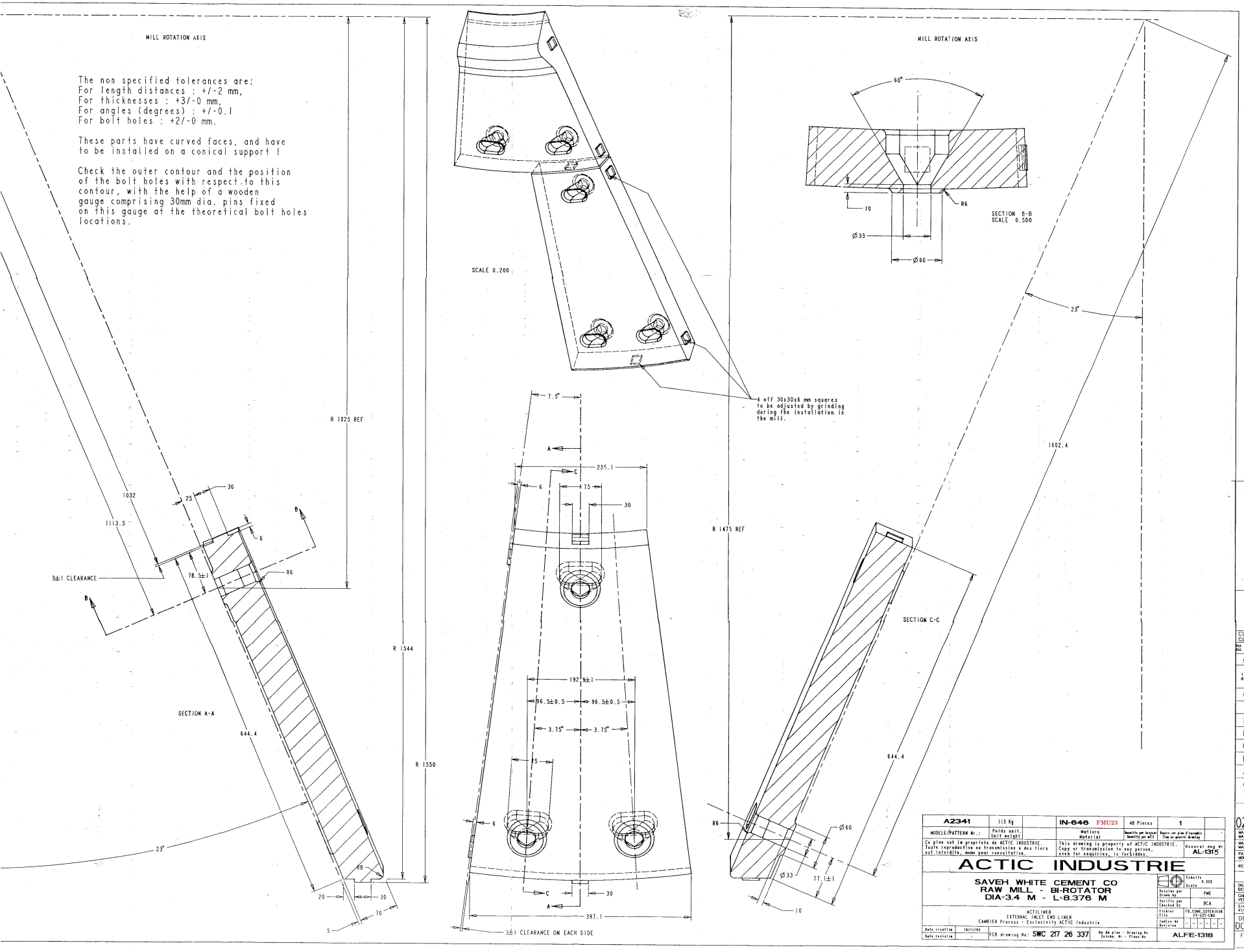

A2341	113 Kg		IN-646 FMU23	48 Pieces	1
MODELE/PATTERN Nr.:	Poids unit. Unit weight:		Matiere Material	Quantite par machine Quantity per mill	Depuis ser plan d'ensemble Plan ou general drawing

Ce plan est la propriete de ACTIC INDUSTRIE. Toute reproduction ou transmission a des tiers est interdite, meme pour consultation.

This drawing is property of ACTIC INDUSTRIE. Copy or transmission to any person, even for enquiries, is forbidden.

General dwg Nr: AL-1315

ACTIC INDUSTRIE

SAVEH WHITE CEMENT CO
RAW MILL - BI-ROTATOR
DIA-3.4 M - L-8.376 M

Echelle Scale 0.333

Dessine par Drawn by: PME

Verifie par Checked by: BCA

Fichier File: FB_COMP_EXTERIEUR FC-EST-CAD

Indice de Revision: - - - - -

ACTILINER
EXTERNAL INLET END LINER
CAMBIER Process - Exclusivity ACTIC Industrie

Date creation: 16/11/93
Date revision: -

FCB drawing No: SWC 217 26 337

No de plan - Drawing No / Zeichn. Nr - Plano No: ALFE-1318

SAVEH WHITE CEME

ISLAMIC REPUBLIC OF I

500 TPD WHITE CEMENT

RA = SURFACE ROUGHNESS

RA √ FUGOTEST LCA NF E 05-051

CLASS CLASSE	N 12	N 11	N 10	N 9	N 8	N 7	N 6	N 5	N 4	N 3	N 2
RA IN MICRONS RA EN MICRONS	50	25	12.5	6.3	3.2	1.6	0.8	0.4	0.2	0.1	0.05

ROUGH AND FLAT SURFACE WITHOUT MACHINING OVERTHICKNESS
SURFACE BRUTE ET UNIE - SANS SUREPAISSEUR D'USINAGE

LIMITS OF TOLERANCE WITHOUT
LIMITES DES TOLERA SANS MENT

TRON DE A	0	6	30
EXTERIOR D. EXT	+0	0.2	0.4
BORE DIAMETER	+0	0.2	0.4
LENGTH LONG.	+	0.1	0.2
CT DIST. CENTR'AXE	+	0.1	0.2

IND REV	NBRE DE MBER OF	DATE	DESSINE DRAWN	VERIFIE CHECKED	VISE SIGNED
G					
F					
E					
D					
C					
B					
A		/ /			

THIS DRAWING I
CE DESSIN EST LA PR
IL NE PEUT ETRE NI COPIE NI CO

GROUP 025 — PLANT: GRINDING MILL

ITEM 025-10 — EQUIPMENT: RAW MILL

MATERIAL MATIERE:

MASS MASSE:

PATTERN MODELE:

REFERENCE: ALFE 13-18

SCALE ECHELLE: /

DRAWING TITLE/TITRE DU DESSI
EXTERNAL INL
END LINER

	DATE	NAME/NOM
DRAWN DESSINE	30/11/93	ROUSSEL
CHECKED VERIFIE	30/11/93	
SIGNED VISE	31.12.93	

DEPART. DCI/BEC

DOCUMENT NUMBER NUMERO DE DOCUMENT

FORMAT A1

DRAWING NUMBER/NUMERO DE DESSIN: SWC 21

GRO

Etablissement de L

84 de l'Union SP 2047 - 59013 LILLE CEDEX FRA

TYPE | CLIENT | ITEM

ied tolerances are:
tances : +/-2 mm,
s : +3/-0 mm,
grees) : +/-0.1
s : +2/-0 mm.

e curved faces, and have
d on a conical support !

r contour and the position
les with respect to this
the help of a wooden gauge
2 x 30mm dia. pins fixed on this
heoretical bolt hole locations.

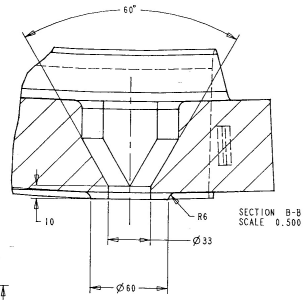

SECTION B-B
SCALE 0.500

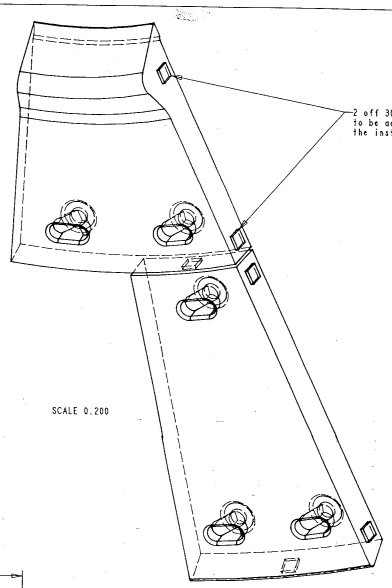

SCALE 0.200

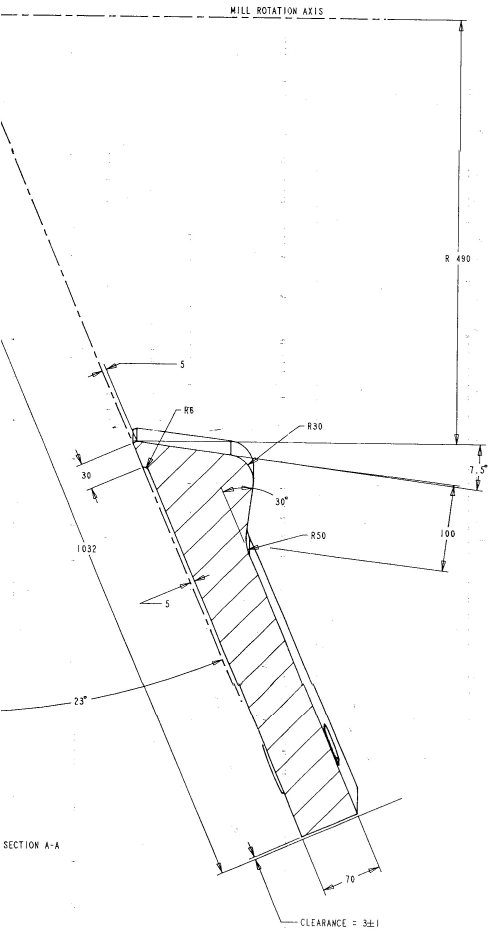

SECTION A-A

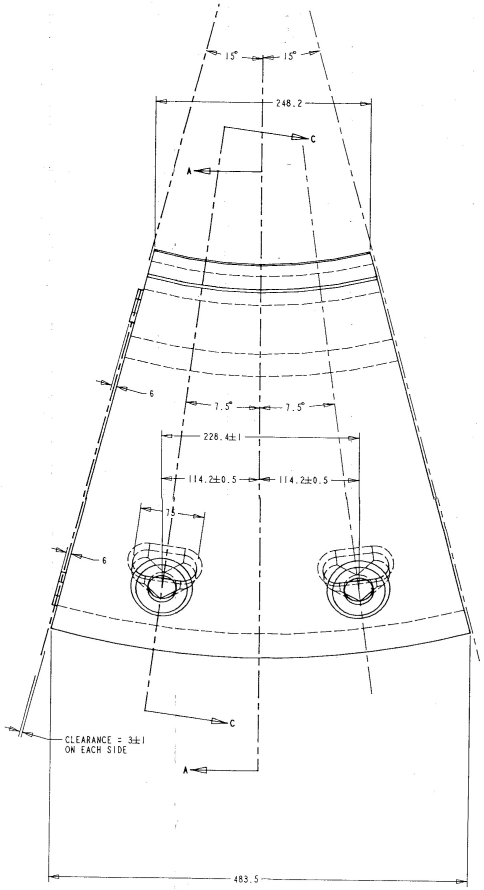

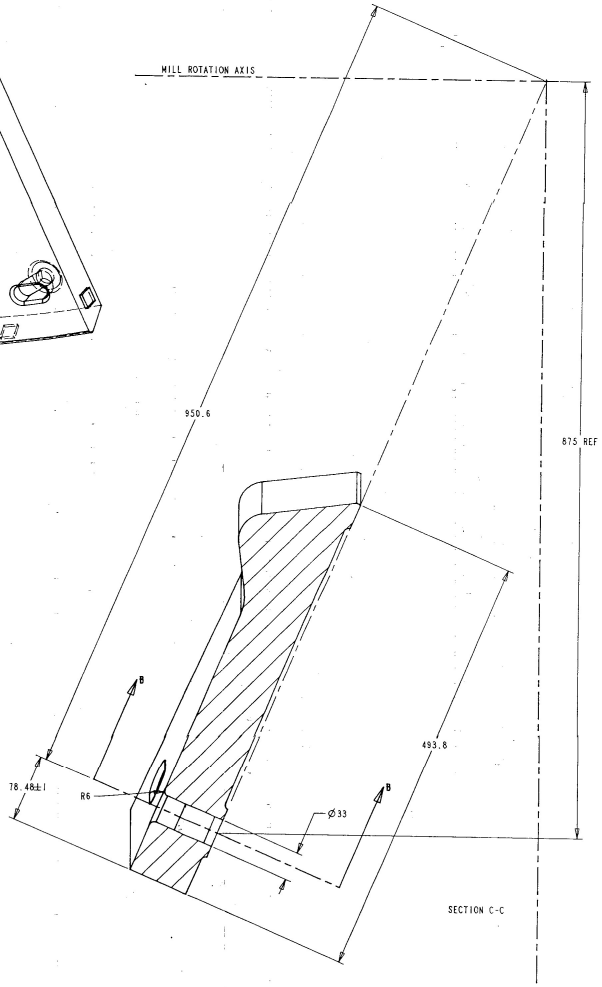

SECTION C-C

A2342	101 Kg		IN-646	24 Pieces	2
MODELE/PATTERN Nr.:	Poids unit. / Unit weight		Matiere / Material	Quantite par Broyeur / Quantity per Mill	Repere sur plan d'ensemble / Item on general drawing

Ce plan est la propriete de ACTIC INDUSTRIE. Toute reproduction ou transmission a des tiers est interdite, meme pour consultation.

This drawing is property of ACTIC INDUSTRIE. Copy or transmission to any person, even for enquiries, is forbidden.

General dwg Nr AL-1315

ACTIC INDUSTRIE

SAVEH WHITE CEMENT CO
RAW MILL - BI-ROTATOR
DIA=3.4 M - L=8.376 M

Echelle / Scale 0.333

Dessine par / Drawn by: PWE

Verifie par / Checked by: BCA

ACTILINER
INTERNAL INLET END LINER
CAMBIER Process - Exclusivity ACTIC Industrie

Fichier / File: FR_CONE_INTERIEUR FE-INT-CRE

Indice des Revisions: - - - - - -

Date creation: 16/11/93

Date revision: -

FCB drawing No: SWC 217 26 338

No. du plan. - Drawing No. Zeichn. Nr - Plano No.: ALFE-1319

SAVEH WHITE CEME

ISLAMIC REPUBLIC OF I

500 TPD WHITE CEMENT

RA = SURFACE ROUGHNESS

RA √ RUGOTEST LCA NF E 05-051

CLASS / CLASSE	N 12	N 11	N 10	N 9	N 8	N 7	N 6	N 5	N 4	N 3	N 2
RA IN MICRONS / RA EN MICRONS	50	25	12.5	6.3	3.2	1.6	0.8	0.4	0.2	0.1	0.05

ROUGH AND FLAT SURFACE WITHOUT MACHINING (INTERCHANGES) - SURFACE BRUTE ET UNIE - SANS SUREPAISSEUR D'USINAGE

LIMITS OF TOLERANCES WITHOUT
LIMITES DES TOLERAN SANS MONTI

FROM / DE	0 to A	A to B	B to 20
OUTSIDE Ø - EXT	±0	0.2	0.4
ALESAGE	±0	0.2	0.4
LENGTH LONG	±	0.1	0.2
CT DIST. ENTR AXE	±	0.1	0.2

END REV	NBRE DE MODIF OF	DATE	DESSINE DRAWN	VERIFIE CHECKED	VISE SIGNED
G					
F					
E					
D					
C					
B					
A		/ /			

THIS DRAWING IS
IT MUST NOT BE COPIED OR GIVEN
CE DESSIN EST LA PR
IL NE PEUT ETRE NI COPIE NI COM

GROUP 025 — PLANT: GRINDING MILL

ITEM 025-10 — EQUIPMENT: RAW MILL

MATERIAL MATIERE: -

MASS MASSE: -

PATTERN MODELE: -

REFERENCE: ALFE 1319

SCALE ECHELLE: /

DRAWING TITLE/TITRE DU DESSIN: INTERNAL IN END LINER

	DATE	NAME/NOM
DRAWN DESSINE	30/11/93	ROUSSEL
CHECKED VERIFIE	30 11 93	
SIGNED VISE	1 12 93	

DEPART. DCI/BEC

DOCUMENT NUMBER NUMERO DE DOCUMENT

FORMAT A1

DRAWING NUMBER/NUMERO DE DESSIN: S W C 2 1

GROU

Etablissement de LIL

Rte de l'Usine SP 2047 - 59015 LILLE CEDEX FRAN

TYPE | CLIENT | ITEM

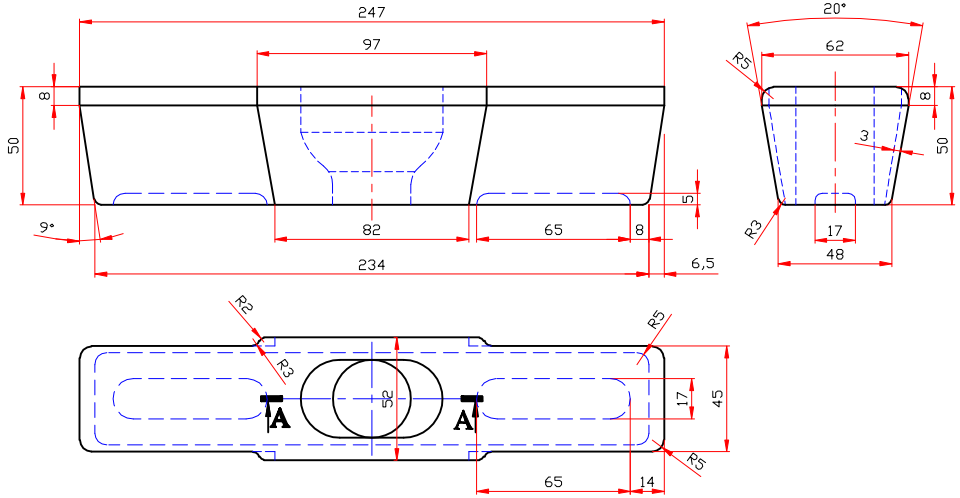

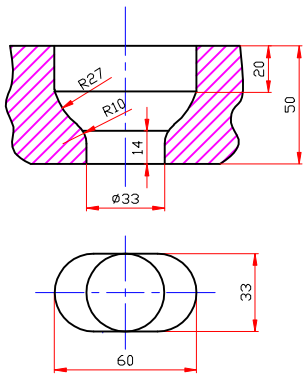

Sec. A-A

Bolt Setting

SAVEH WHITE CEMENT COMPANY			Unspecified Tolerances ISO 8062/CT12			
	Signature	Date	Drawing No. : AA/EA/XL-10000/M	Part No. : D/IA343389	Quntity: 22	Title: Liner M00
Dsgn.	M.J.Ghasemi	89.05.15				
Drawn.	D.Emani	89.06.03	Department : CEMENT MILL	Material: FED14	Weight: 4.35 kg	
Chk.	M.J.Ghasemi	89.06.10				
App.						
Rev. 1			Adress File:			
Rev. 2			Sheet 1 of 1			
Rev. 3			Sclae : ----			

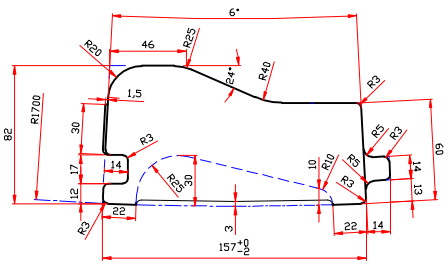

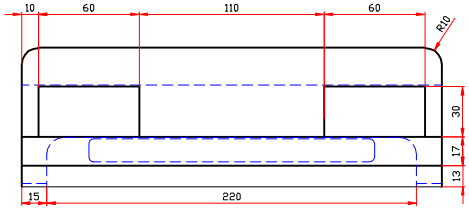

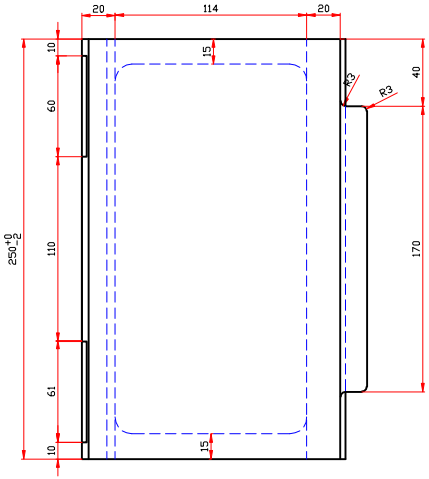

SAVEH WHITE CEMENT COMPANY			Unspecified Tolerances ISO 8062/CT12			
	Signature	Date	Drawing No. : AA/EA/XL30000A	Part No. : D/IA343389	Quntity: 176	Title: Liner A 30
Dsgn.	M.J.Ghasemi	89.05.15				
Drawn.	D.Emani	89.06.03				
Chk.	M.J.Ghasemi	89.06.10	Department : CEMENT MILL	Material: FED13	Weight: 17.7kg	
App.						
Rev. 1			Adress File:			
Rev. 2			Sheet 1 of 1			
Rev. 3			Sclae : ----			

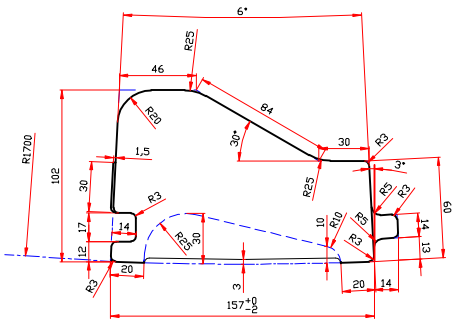

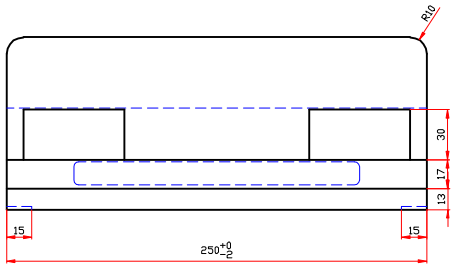

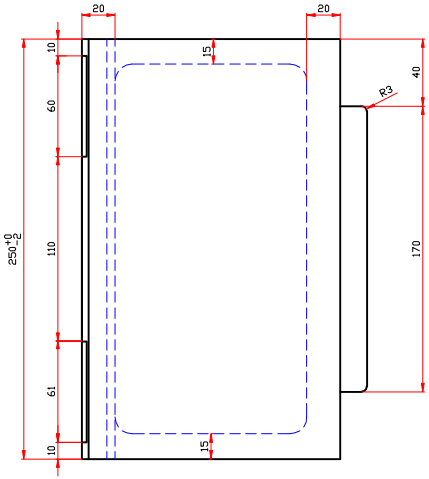

SAVEH WHITE CEMENT COMPANY

Unspecified Tolerances ISO 8062/CT12

	Signature	Date
Dsgn.	M.J.Ghasemi	89.05.15
Drawn.	D.Emani	89.06.03
Chk.	M.J.Ghasemi	89.06.10
App.		
Rev. 1		
Rev. 2		
Rev. 3		

Drawing No. :	Part No. :	Quntity:	Title:
AA/EA/XL30000B	D/IA343389	176	Liner B 30
Department :	Material:	Weight:	
CEMENT MILL	FED13	21.1kg	

Adress File:

Sheet 1 of 1

Sclae : ----

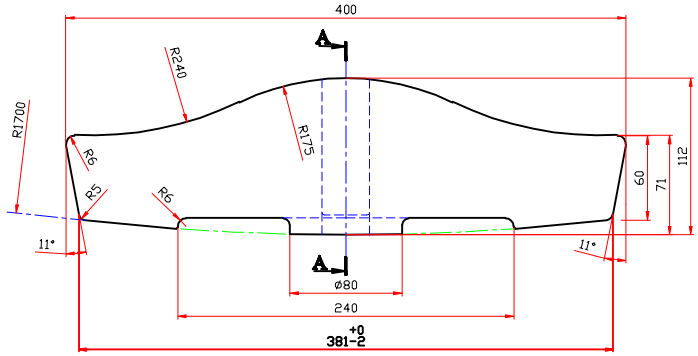

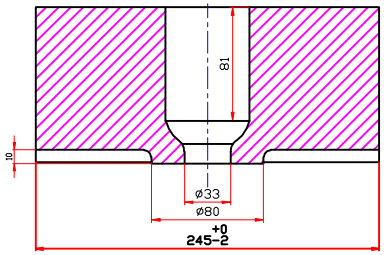

SEC:A-A

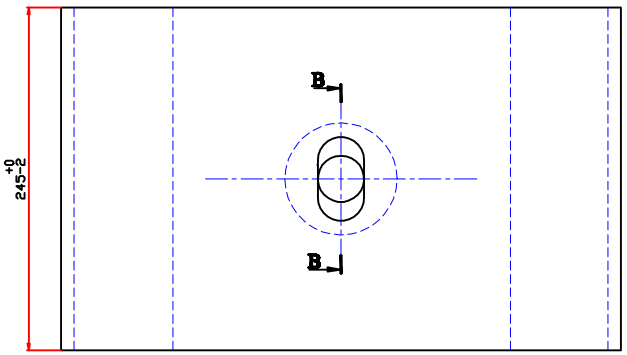

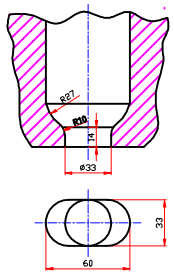

SEC:B-B
Bolt Setting

SAVEH WHITE CEMENT COMPANY

Unspecified Tolerances ISO 8062/CT12

	Signature	Date
Dsgn.	M.J.Ghasemi	89.05.15
Drawn.	D.Emani	89.06.03
Chk.	M.J.Ghasemi	89.06.10
App.		
Rev. 1		
Rev. 2		
Rev. 3		

Drawing No. :	Part No. :	Quntity:	Title:
AA/EA/AR424D	D/IA343389	4	Liner D
Department :	Material:	Weight:	
CEMENT MILL	FED13	52.3 kg	

Adress File:

Sheet 1 of 1

Sclae : ----

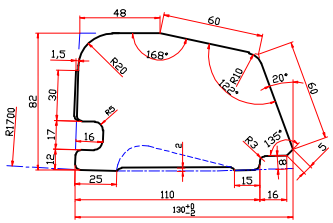

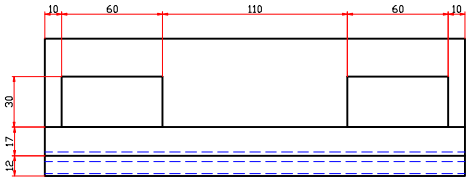

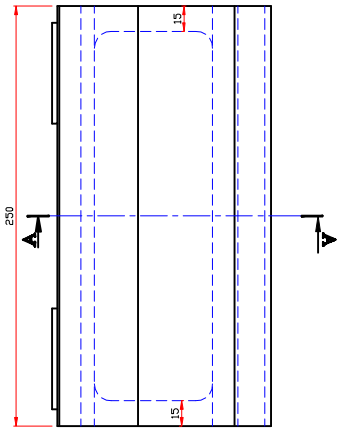

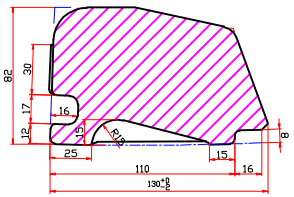

SEC:A-A

SAVEH WHITE CEMENT COMPANY			Unspecified Tolerances ISO 8062/CT12			
	Signature	Date	Drawing No. : AA/EA/XL30000D	Part No. : D/IA343389	Quntity: 42	Title: Liner D 30
Dsgn.	M.J.Ghasemi	89.05.15				
Drawn.	D.Emani	89.06.03				
Chk.	M.J.Ghasemi	89.06.10	Department : CEMENT MILL	Material: FED13	Weight: 16.7kg	
App.						
Rev. 1			Adress File:			
Rev. 2			Sheet 1 of 1			
Rev. 3			Sclae : ----			

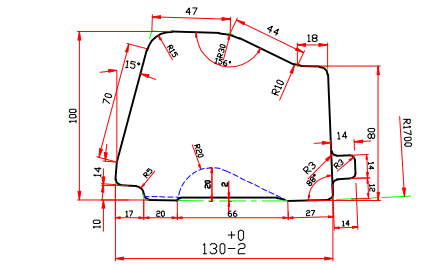

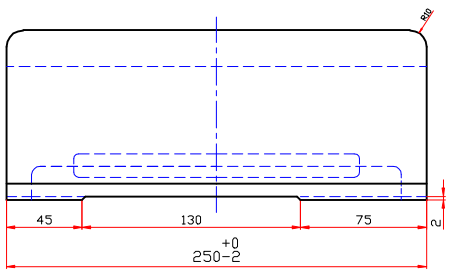

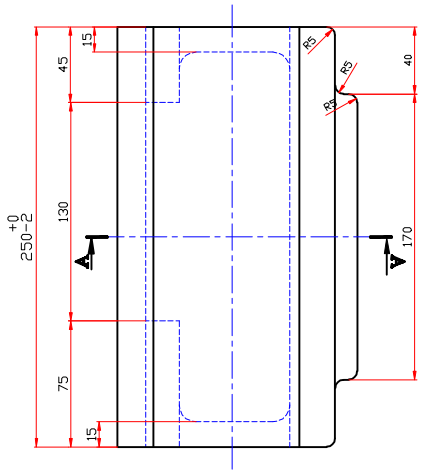

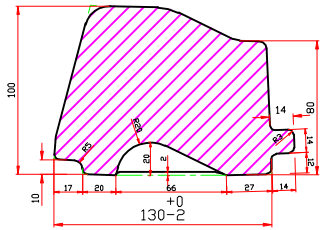

SEC:A-A

SAVEH WHITE CEMENT COMPANY			Unspecified Tolerances ISO 8062/CT12			
	Signature	Date	Drawing No. :	Part No. :	Quntity:	Title:
Dsgn.	M.J.Ghasemi	89.05.15	AA/EA/XL30000E	D/IA343389	42	Liner E 30
Drawn.	D.Emani	89.06.03				
Chk.	M.J.Ghasemi	89.06.10	Department :	Material:	Weight:	
App.			CEMENT MILL	FED13	20.4kg	
Rev. 1			Adress File:			
Rev. 2			Sheet 1 of 1			
Rev. 3			Sclae : ----			

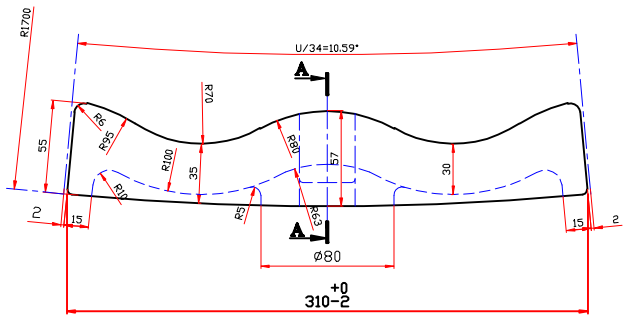

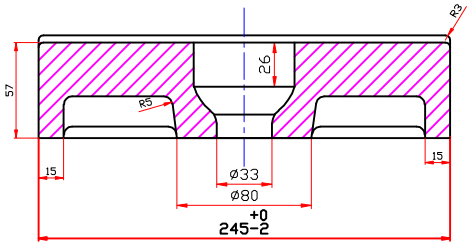

SEC:A-A

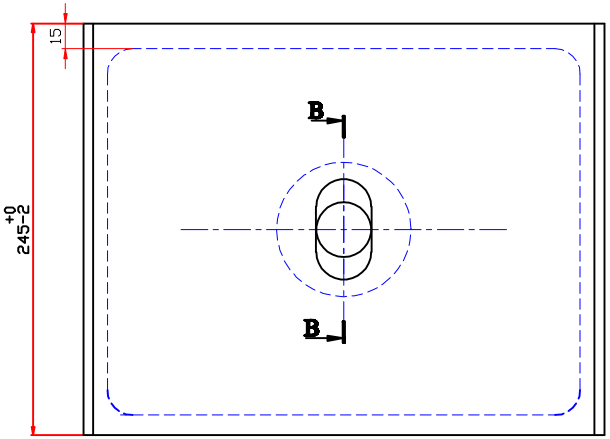

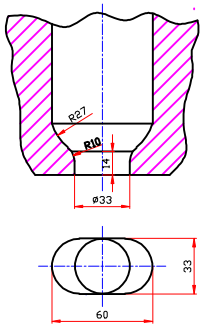

SEC:B-B
Bolt Setting

SAVEH WHITE CEMENT COMPANY

Unspecified Tolerances ISO 8062/CT12

	Signature	Date
Dsgn.	M.J.Ghasemi	89.05.15
Drawn.	D.Emani	89.06.03
Chk.	M.J.Ghasemi	89.06.10
App.		
Rev. 1		
Rev. 2		
Rev. 3		

Drawing No. :	Part No. :	Quntity:	Title:
AA/EA/EW30000A	D/IA343389	909	Liner IIA 30
Department : CEMENT MILL	Material: FED14	Weight: 21.2 kg	

Adress File:

Sheet 1 of 1

Sclae : ----

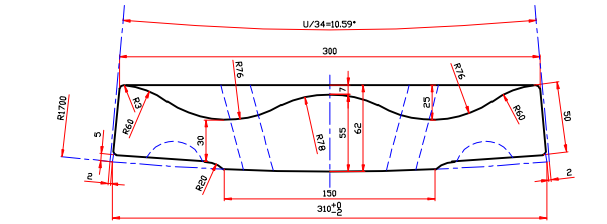

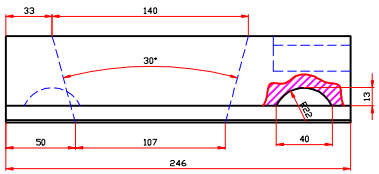

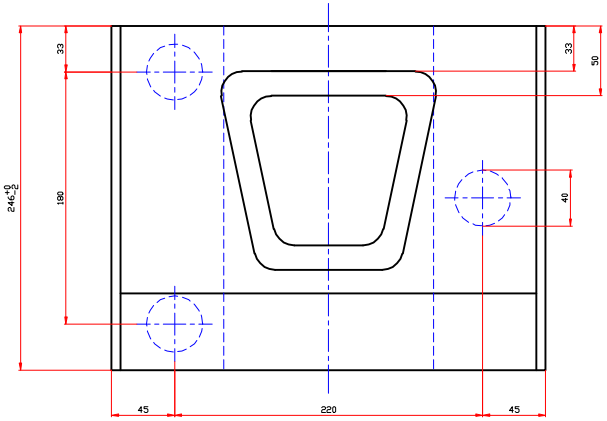

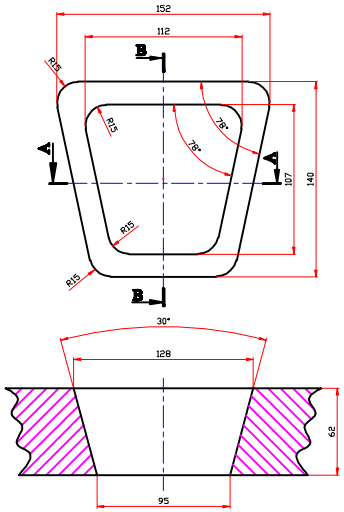

SEC:A-A

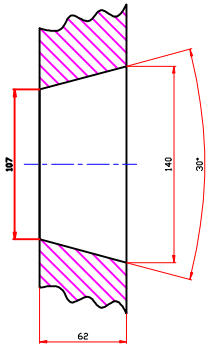

SEC:B-B

SAVEH WHITE CEMENT COMPANY			Unspecified Tolerances ISO 8062/CT12			
	Signature	Date	Drawing No. :	Part No. :	Quntity:	Title:
Dsgn.	M.J.Ghasemi	89.10.15	AA/EA/EW30000B	D/IA343389	136	Liner IIB 30
Drawn.	D.Emani	89.06.03				
Chk.	M.J.Ghasemi	89.11.10	Department :	Material:	Weight:	
App.			CEMENT MILL	FED14	41.7kg	
Rev. 1			Adress File:			
Rev. 2			Sheet 1 of 1			
Rev. 3			Sclae : ----			

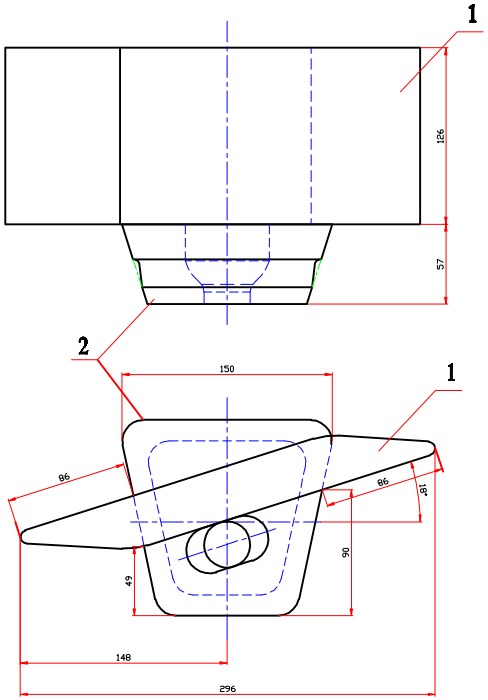

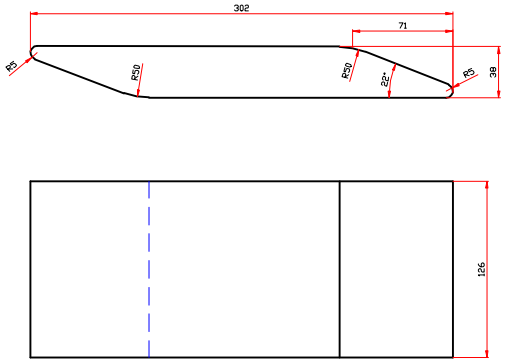

NO.1

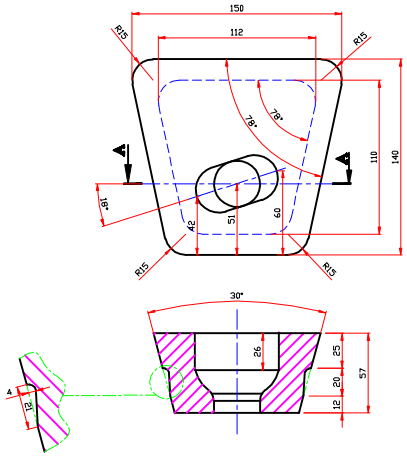

NO.2

SEC:A-A

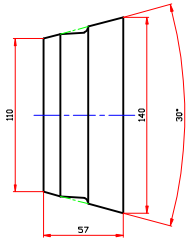

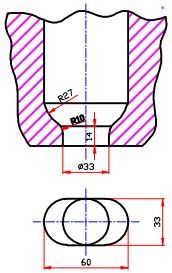

Bolt Setting

SAVEH WHITE CEMENT COMPANY			Unspecified Tolerances ISO 8062/CT12			
	Signature	Date	Drawing No. :	Part No. :	Quntity:	Title:
Dsgn.	M.J.Ghasemi	89.05.15	AA/EA/EW17125D	D/IA343389	136	Liner IID-CCW
Drawn.	D.Emani	89.06.03				
Chk.	M.J.Ghasemi	89.06.10	Department :	Material:	Weight:	
App.			CEMENT MILL	FED14	15kg	
Rev. 1			Adress File:			
Rev. 2			Sheet 1 of 1			
Rev. 3			Sclae : ----			

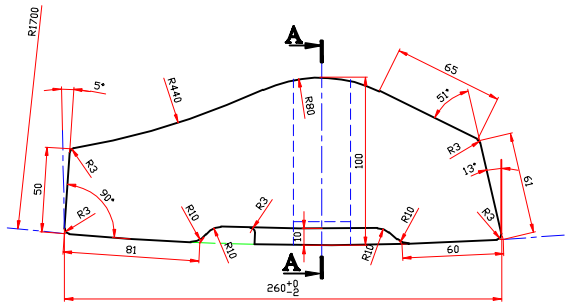

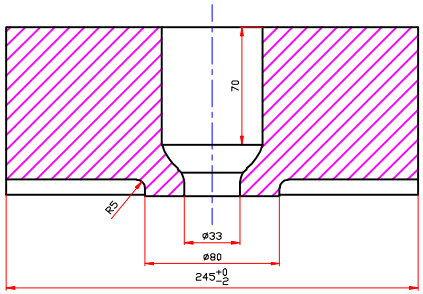

SEC:A-A

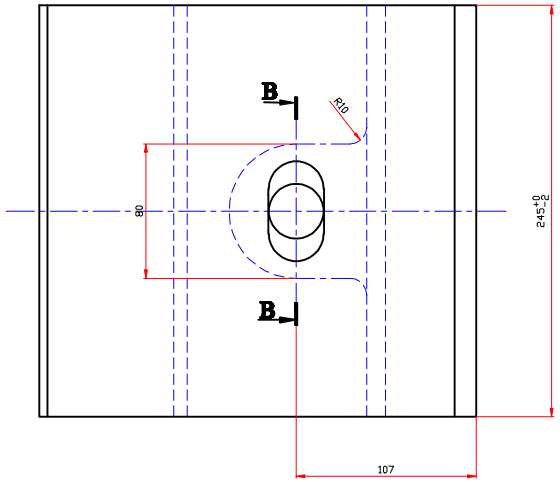

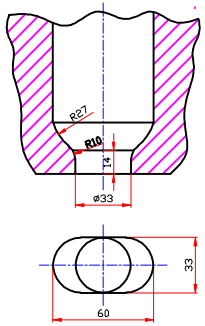

SEC:B-B

Bolt Setting

SAVEH WHITE CEMENT COMPANY

Unspecified Tolerances ISO 8062/CT12

	Signature	Date
Dsgn.	M.J.Ghasemi	89.05.15
Drawn.	D.Emani	89.06.03
Chk.	M.J.Ghasemi	89.06.10
App.		
Rev. 1		
Rev. 2		
Rev. 3		

Drawing No. :	Part No. :	Quntity:	Title:
AA/EA/AR424E	D/IA343389	6	Liner II E
Department :	Material:	Weight:	
CEMENT MILL	FED14	32.3 kg	

Adress File:

Sheet 1 of 1

Sclae : ----

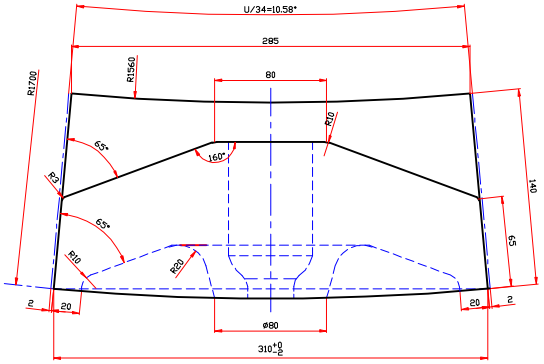

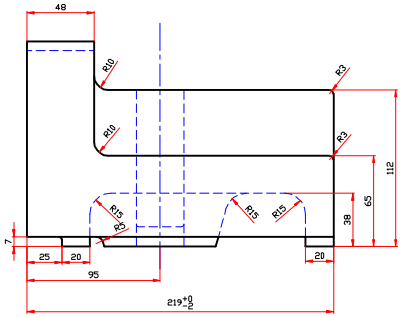

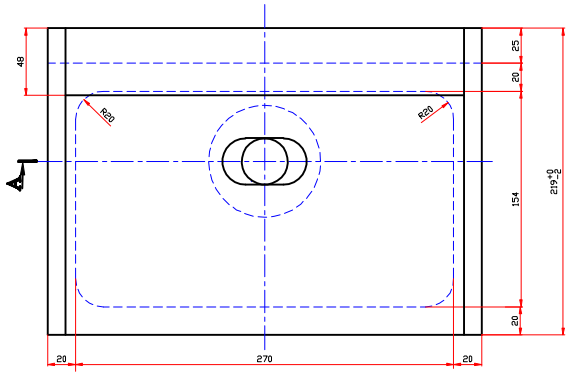

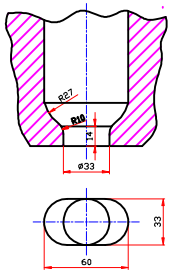

Bolt Setting

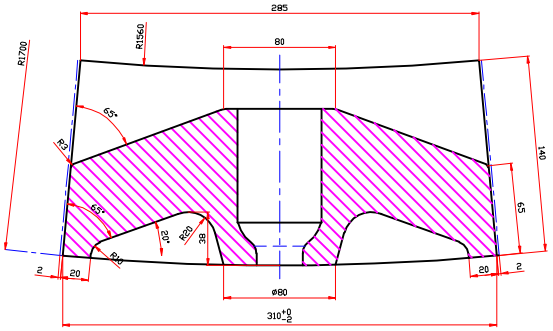

SEC:A-A

SAVEH WHITE CEMENT COMPANY

Unspecified Tolerances ISO 8062/CT12

	Signature	Date
Dsgn.	M.J.Ghasemi	89.05.15
Drawn.	D.Emani	89.06.03
Chk.	M.J.Ghasemi	89.06.10
App.		
Rev. 1		
Rev. 2		
Rev. 3		

Drawing No. :	Part No. :	Quntity:	Title:
AA/EA/XN38000T	D/IA343389	34	Liner IT
Department :	Material:	Weight:	
CEMENT MILL	FED13	41.7kg	

Adress File:

Sheet 1 of 1

Sclae : ----

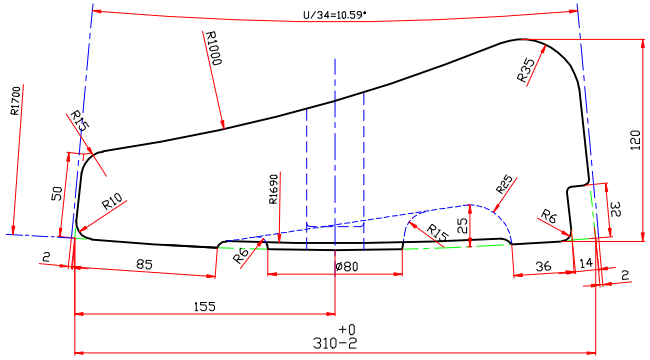

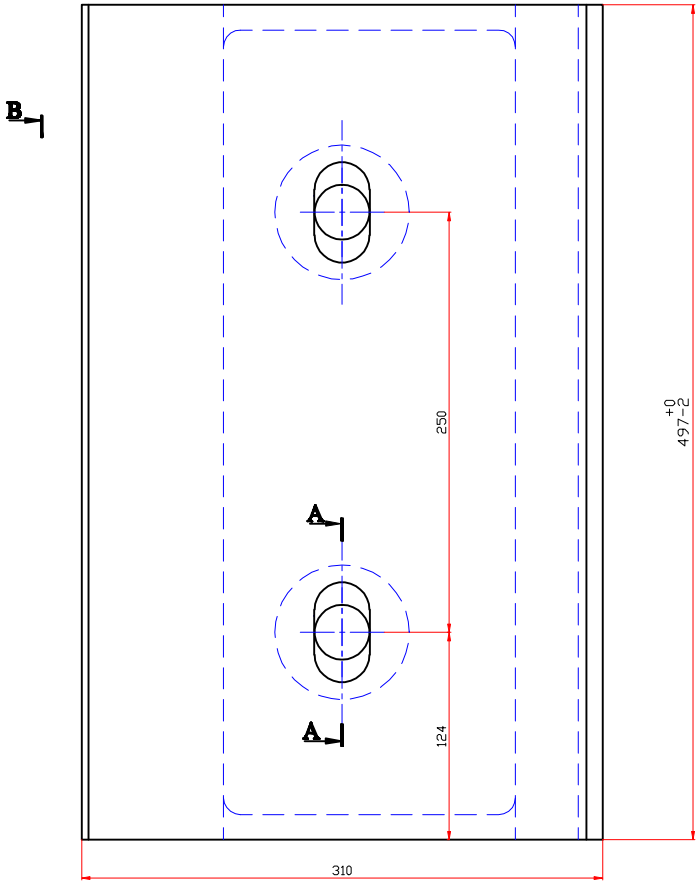

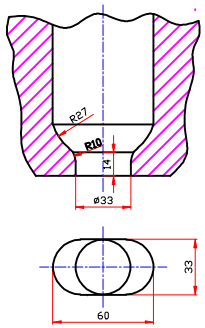

SEC:A-A
Bolt Setting

SAVEH WHITE CEMENT COMPANY

Unspecified Tolerances ISO 8062/CT12

	Signature	Date
Dsgn.	M.J.Ghasemi	89.05.15
Drawn.	D.Emani	89.06.03
Chk.	M.J.Ghasemi	89.06.10
App.		
Rev. 1		
Rev. 2		
Rev. 3		

Drawing No. :	Part No. :	Quntity:	Title:
AA/EA/XL30000K	D/IA343389	2	Liner K 30
Department :	Material:	Weight:	
CEMENT MILL	FED13	89kg	

Adress File:

Sheet 1 of 1

Sclae : ----

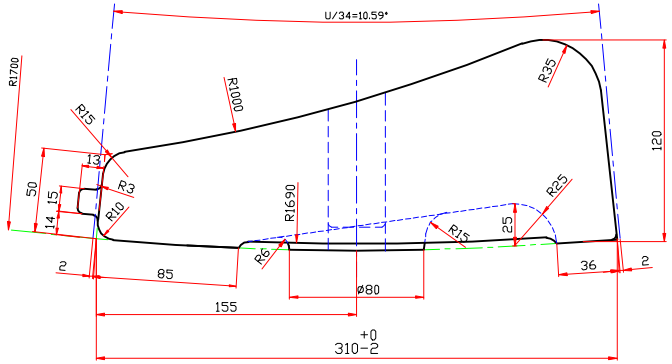

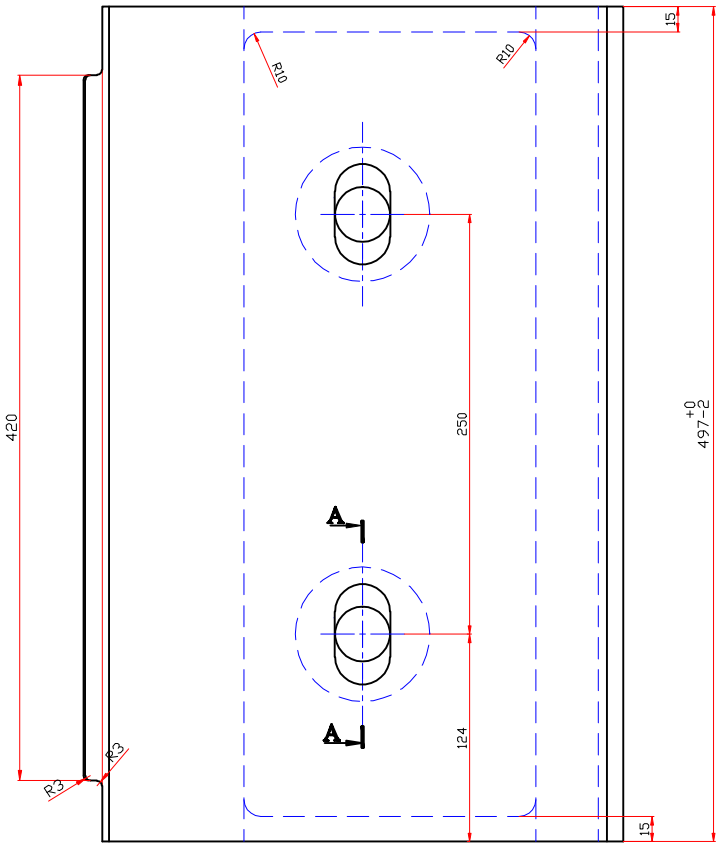

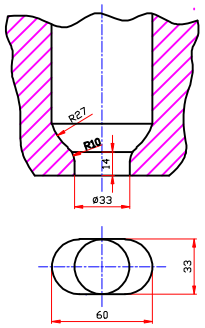

SEC:A-A

Bolt Setting

SAVEH WHITE CEMENT COMPANY

Unspecified Tolerances ISO 8062/CT12

	Signature	Date
Dsgn.	M.J.Ghasemi	89.05.15
Drawn.	D.Emani	89.06.03
Chk.	M.J.Ghasemi	89.06.10
App.		
Rev. 1		
Rev. 2		
Rev. 3		

Drawing No. :	Part No. :	Quntity:	Title:
AA/EA/XL30000L	D/IA343389	2	Liner L 30
Department :	Material:	Weight:	
CEMENT MILL	FED13	89.4kg	

Adress File:

Sheet 1 of 1

Sclae : ----

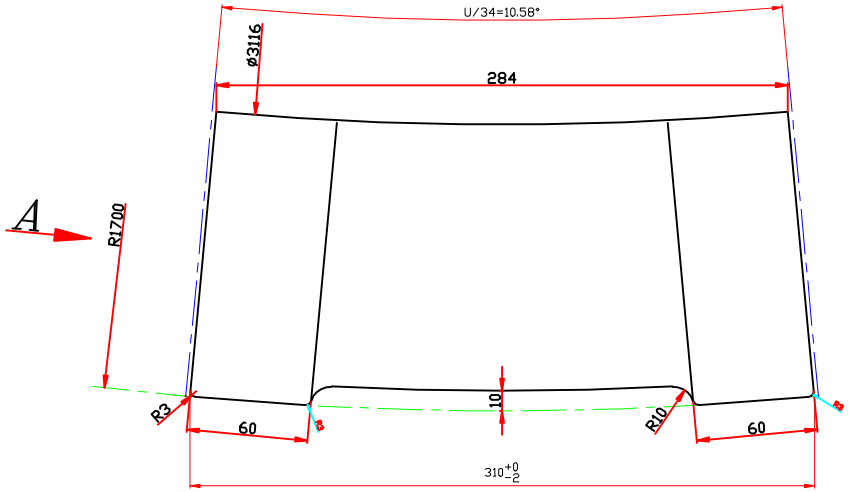

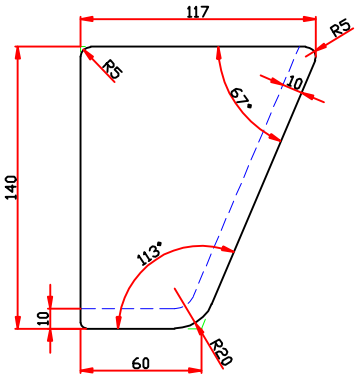

View A

SAVEH WHITE CEMENT COMPANY			Unspecified Tolerances ISO 8062/CT12			
	Signature	Date	Drawing No. :	Part No. :	Quntity:	Title:
Dsgn.	M.J.Ghasemi	89.05.15	AA/EA/NC2436Z	D/IA343389	34	Liner Z
Drawn.	D.Emani	89.06.03				
Chk.	M.J.Ghasemi	89.06.10	Department :	Material:	Weight:	
App.			CEMENT MILL	FED13	26.4 kg	
Rev. 1			Adress File:			
Rev. 2			Sheet 1 of 1			
Rev. 3			Sclae : ----			

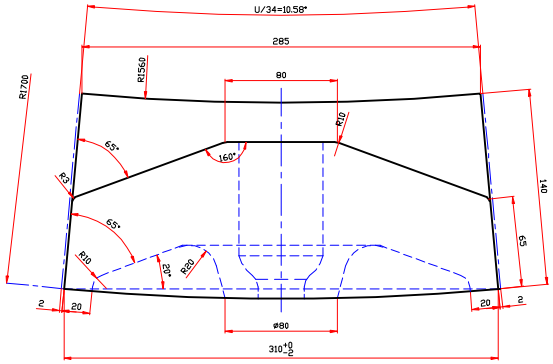

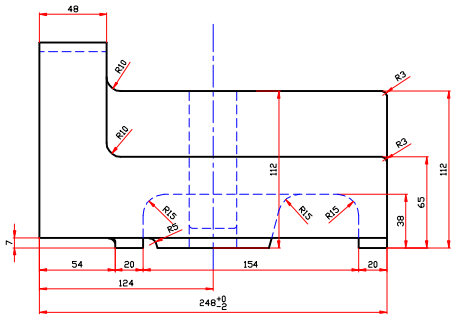

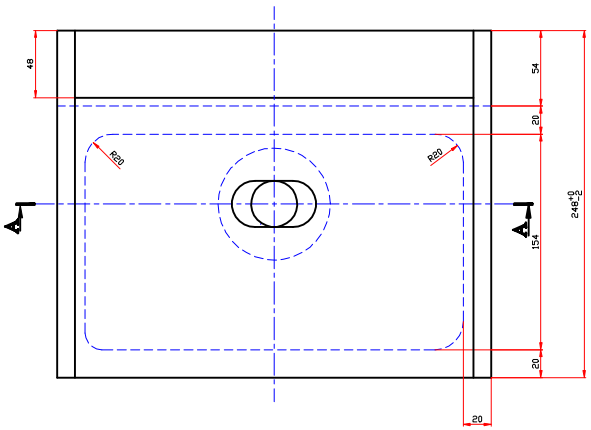

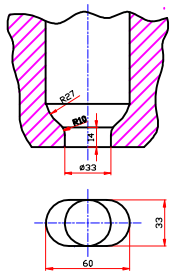

Bolt Setting

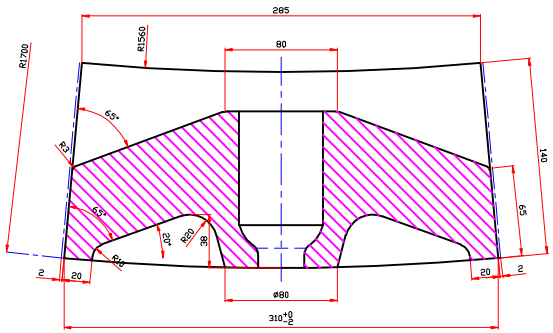

SEC:A-A

SAVEH WHITE CEMENT COMPANY			Unspecified Tolerances ISO 8062/CT12			
	Signature	Date	Drawing No. : AA/EA/XN58000T	Part No. : D/IA343389	Quntity: 34	Title: Liner T
Dsgn.	M.J.Ghasemi	89.05.15				
Drawn.	D.Emani	89.06.03				
Chk.	M.J.Ghasemi	89.06.10	Department : CEMENT MILL	Material: FED13	Weight: 50.8kg	
App.						
Rev. 1			Adress File:			
Rev. 2			Sheet 1 of 1			
Rev. 3			Sclae : ----			

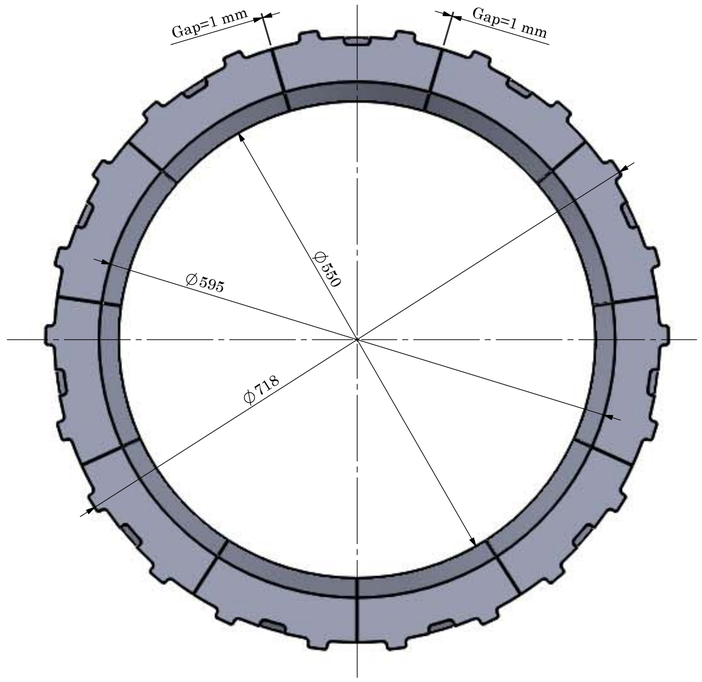

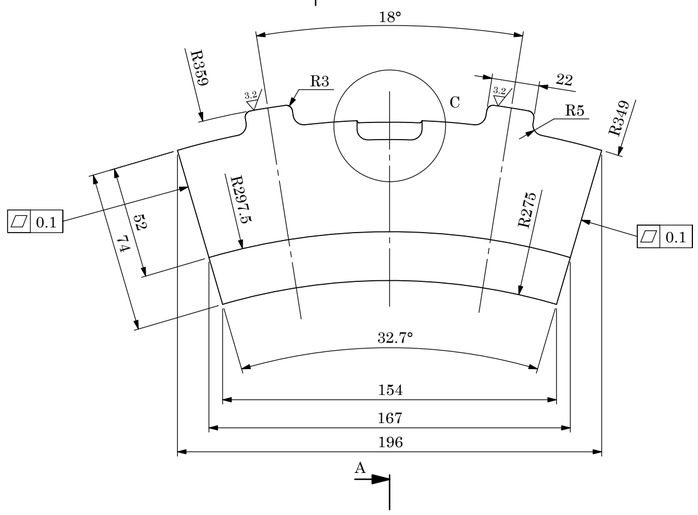

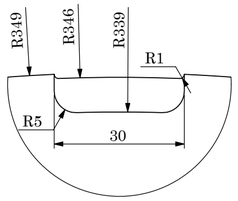

DETAIL C
SCALE 1 : 1

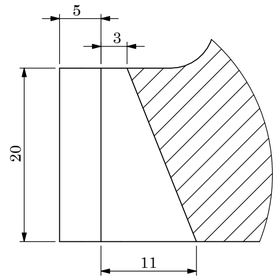

DETAIL D
SCALE 2 : 1

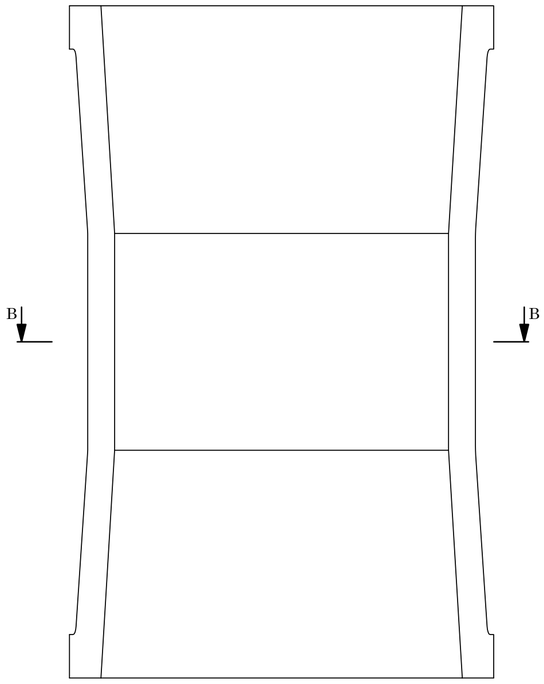

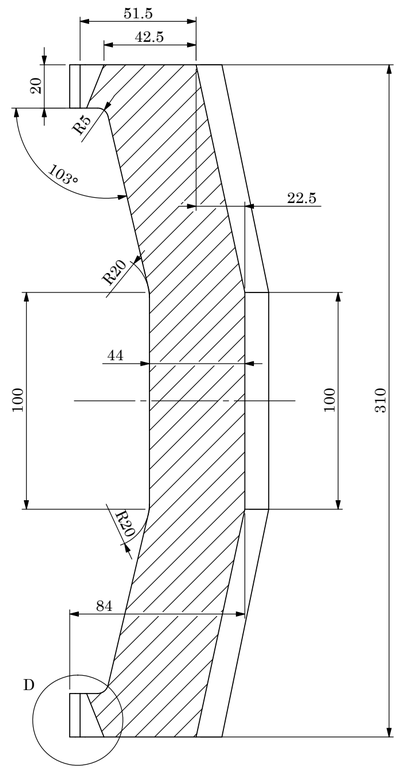

SECTION A-A

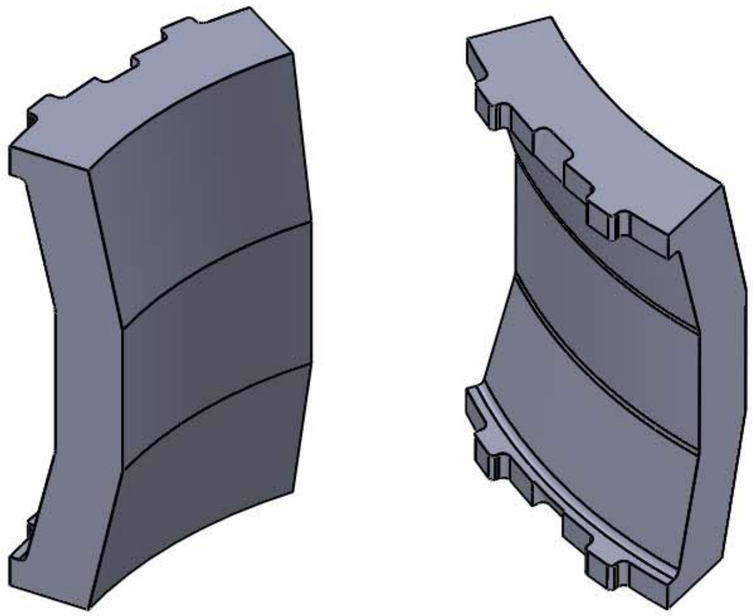

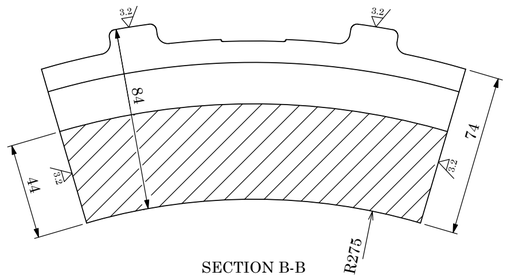

SECTION B-B

* تلـــرانس بـــرای کلیـــه ابعـــاد : ±0.5 mm

UNLESS OTHERWISE SPECIFIED:
DIMENSIONS ARE IN MILLIMETERS
SURFACE FINISH:
TOLERANCES:
LINEAR:
ANGULAR:

FINISH:

DEBURR AND BREAK SHARP EDGES

دفتر فنی و برنامه ریزی
شرکت سیمان سفید ساوه

	DRAWN	CHK'D
NAME	سعید توکلی	یوسف گرجی
DATE	۹۷/۰۵/۲۴	
SIGNATURE		

ITEM: 10-40

STORAGE CODE: 21104010113

MODEL CASTING CODE: 25531113115

MATERIAL: 1.3401 + (0.3~0.5)% Mo

QUANTITY: 11 WEIGHT(kg): 220

TITLE:

زره سنگ شکن ژیراتوری

Bevel Concave - Gyratory Crusher

DROWING NO.: SWC.T-0008

DROWING Ref.: DWG: 4C6141 ITEM : 320

SCALE:1:2 REVISION : 1 SHEET 1 OF 1 A2

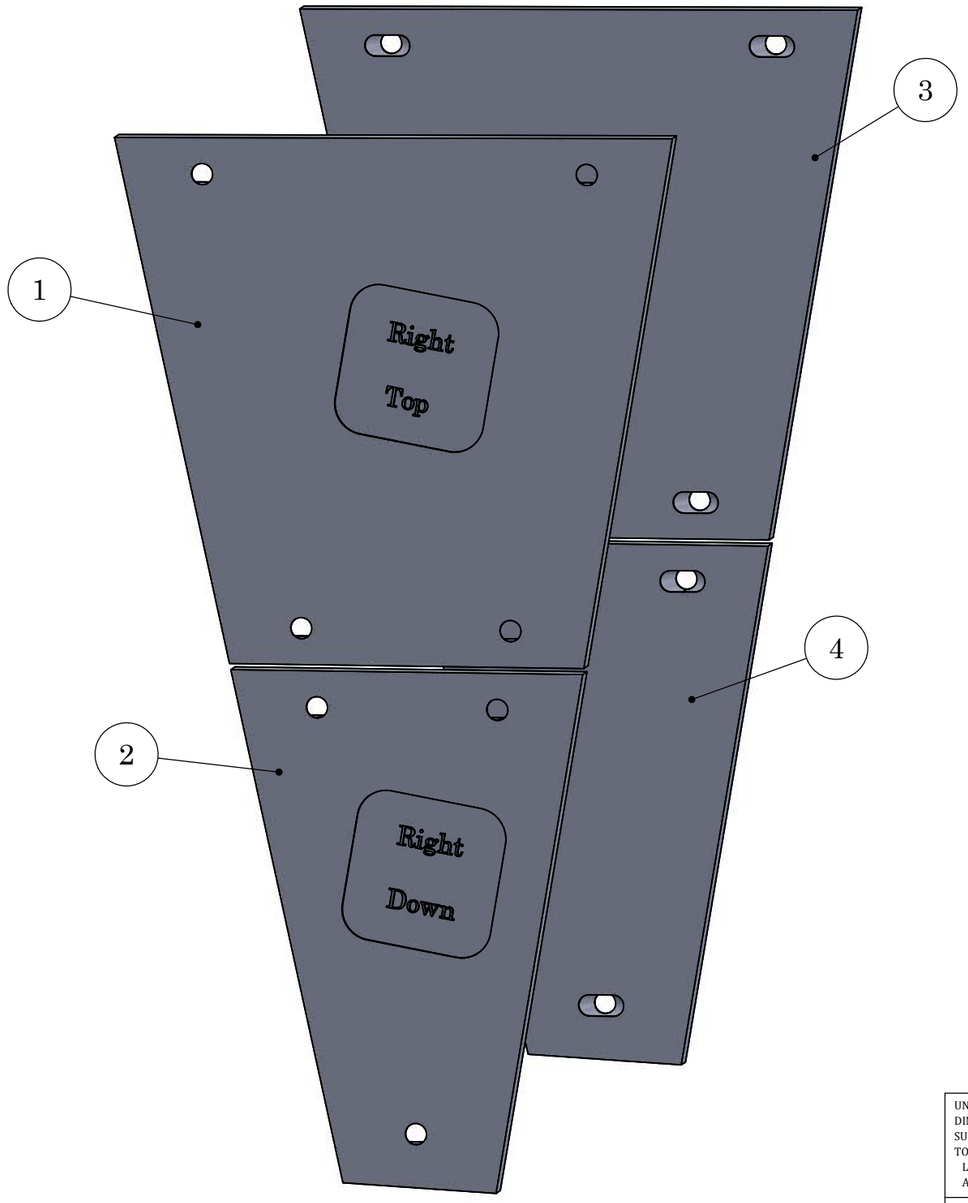

ITEM NO.	PART NUMBER	MATERIAL	QTY.
1	Right - Top	1.3401 + 0.6% Mo + 2% Cr	1
2	Right - Down	1.3401 + 0.6% Mo + 2% Cr	1
3	Left - Top	1.3401 + 0.6% Mo + 2% Cr	1
4	Left - Down	1.3401 + 0.6% Mo + 2% Cr	1

UNLESS OTHERWISE SPECIFIED:
DIMENSIONS ARE IN MILLIMETERS
SURFACE FINISH:
TOLERANCES: *DIN 7168*
LINEAR:
ANGULAR:

FINISH:

DEBUR AND BREAK SHARP EDGES

دفتر فنی و برنامه ریزی
شرکت سیمان سفید ساوه

بررسی و تایید :	ترسیم :		کد دستگاه : 10-32
	سعید توکلی	نام :	کد کالا :
	۱۴۰۰/۰۱/۲۹	تاریخ :	کد کالای مدل :
		امضاء :	جنس : 1.3401 + 0.6% Mo + 2% Cr
			تعداد : 1 — وزن(کیلو) :

عنوان نقشه :
لاینرهای سنگ شکن فکی
Jaw Crusher - Wear Plate

شماره نقشه : SWC.T-0066

شماره نقشه مرجع : 3C.5871 (Item 118)

SCALE : 1:10 | REVISION : 2 | SHEET 1 OF 5 | A3

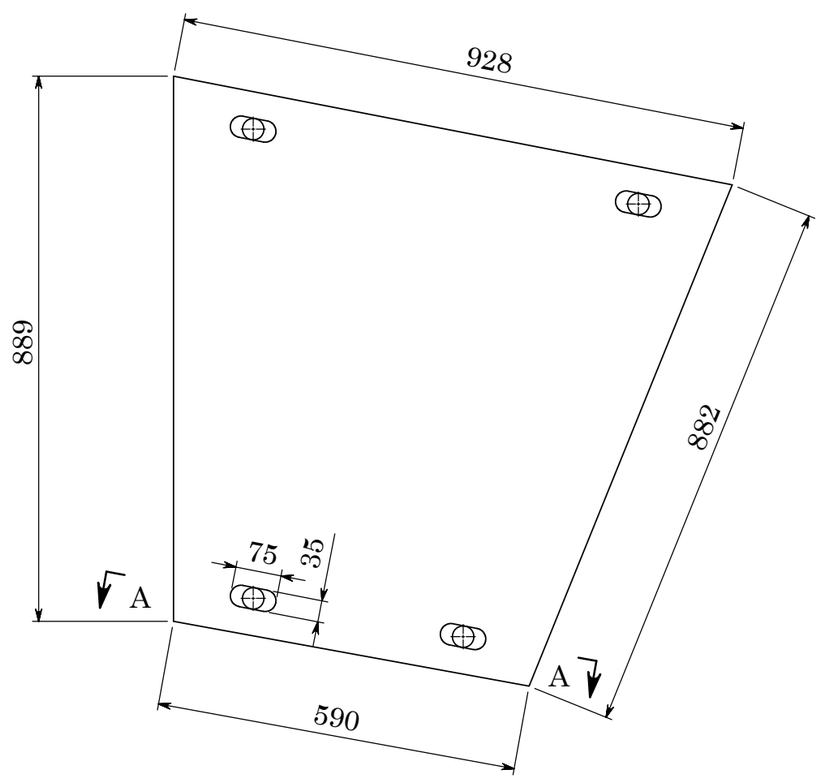

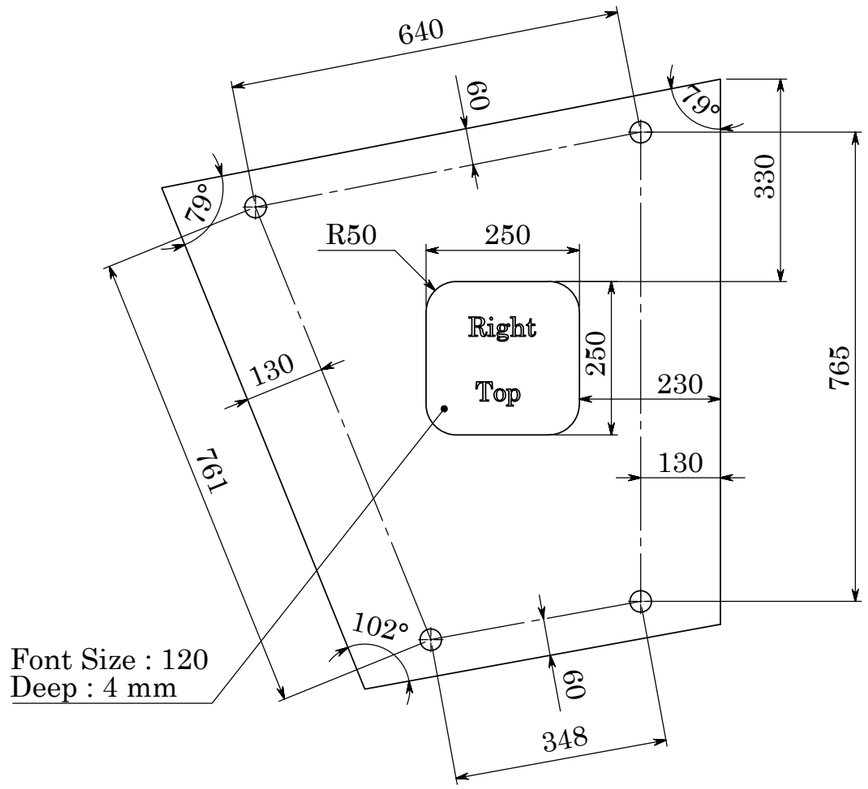

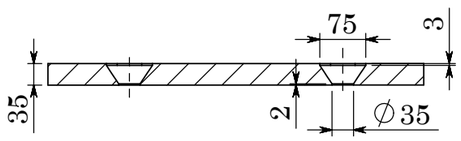

SECTION A-A

UNLESS OTHERWISE SPECIFIED:
DIMENSIONS ARE IN MILLIMETERS
SURFACE FINISH:
TOLERANCES: *DIN 7168*
LINEAR:
ANGULAR:

FINISH:

DEBUR AND
BREAK SHARP
EDGES

دفتر فنی و برنامه ریزی
شرکت سیمان سفید ساوه

بررسی و تایید :	ترسیم :		کد دستگاه : 10-32
	نام : سعید توکلی		کد کالا : 21101210211
	تاریخ : ۱۴۰۰/۰۱/۲۹		کد کالای مدل : 25531113116
		امضاء :	جنس : 1.3401 + 0.6% Mo + 2% Cr
			تعداد : 1 — وزن (kg):

عنوان نقشه :
لاینر بالا راست سنگ شکن فکی
Upper Right - Wear Plate

شماره نقشه : SWC.T-0066		شماره نقشه مرجع : 3C.5871 (Item 118)	
SCALE : 1:10	REVISION : 2	SHEET 2 OF 5	A3

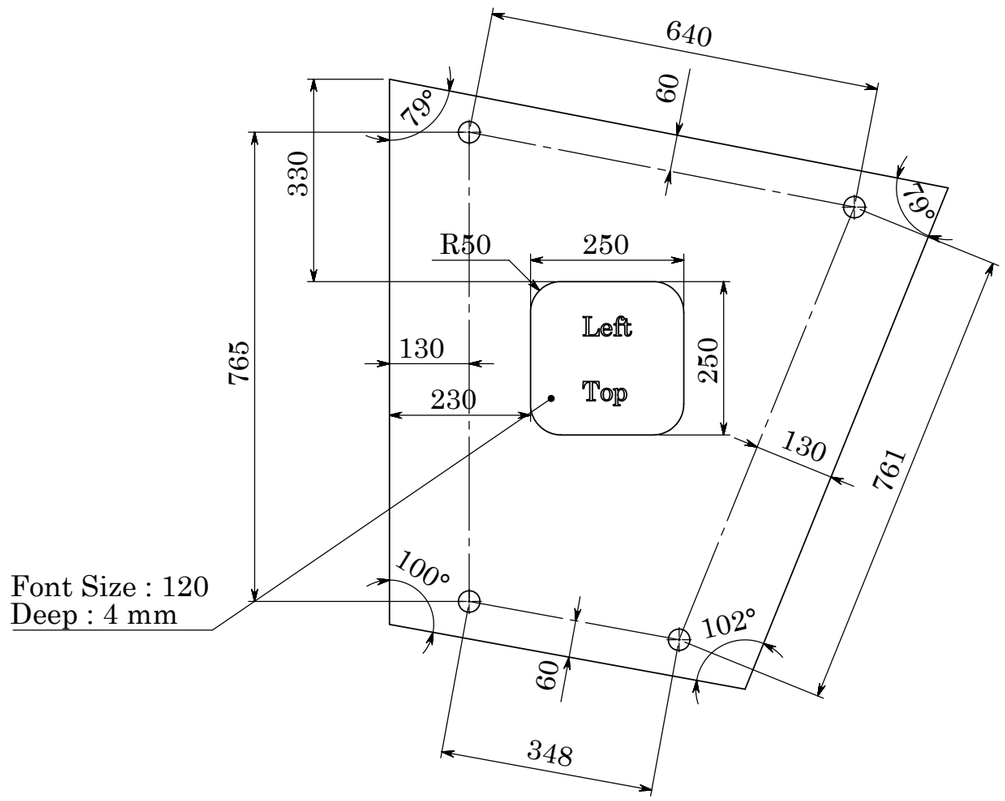

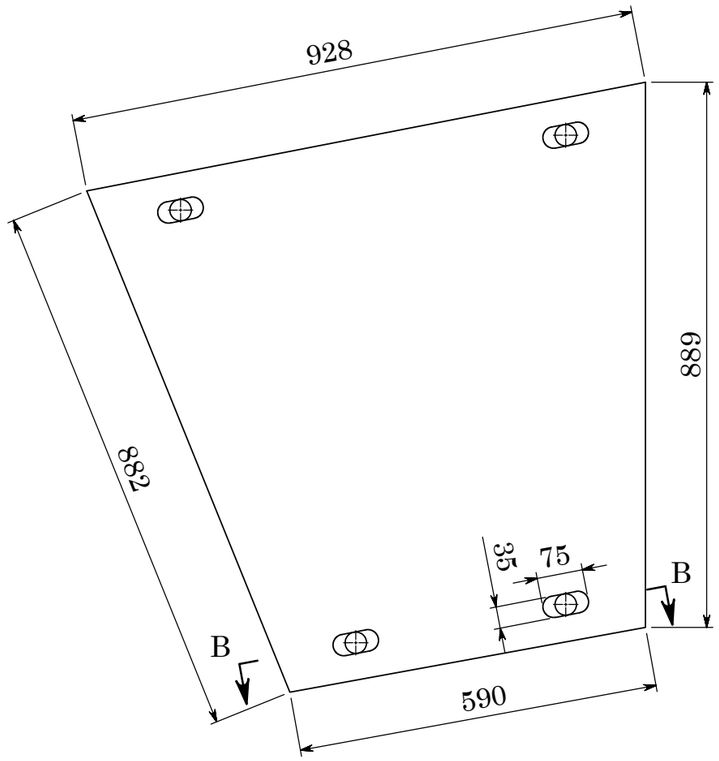

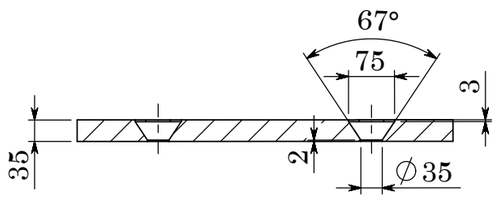

SECTION B-B

UNLESS OTHERWISE SPECIFIED: DIMENSIONS ARE IN MILLIMETERS SURFACE FINISH: TOLERANCES: *DIN 7168* LINEAR: ANGULAR:	FINISH:	DEBUR AND BREAK SHARP EDGES	دفتر فنی و برنامه ریزی شرکت سیمان سفید ساوه
بررسی و تایید :	ترسیم :	کد دستگاه : 10-32	عنوان نقشه : لاینر بالا چپ سنگ شکن فکی Upper Left - Wear Plate
	سعید توکلی	نام :	کد کالا : 21101210213
	۱۴۰۰/۰۱/۲۹	تاریخ :	کد کالای مدل : 25531113118
		امضاء :	جنس : 1.3401 + 0.6% Mo + 2% Cr
			شماره نقشه : SWC.T-0066
			شماره نقشه مرجع : 3C.5871 (Item 118)
			تعداد : 1 — وزن(کیلو) :
			SCALE : 1:10 — REVISION : 2 — SHEET 3 OF 5 — A3

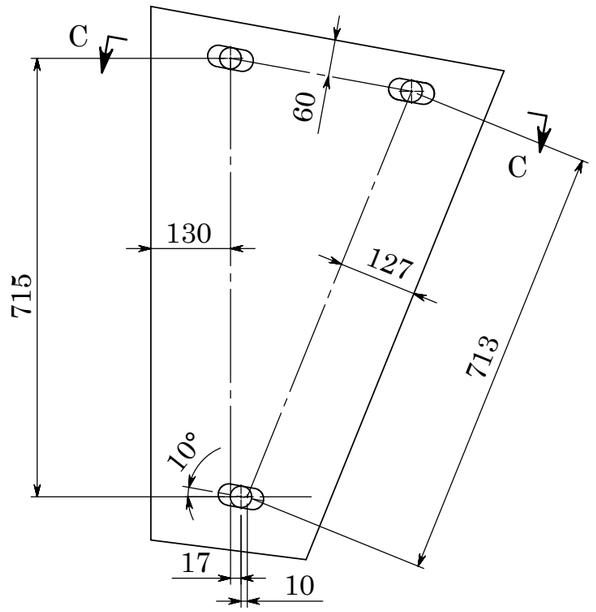

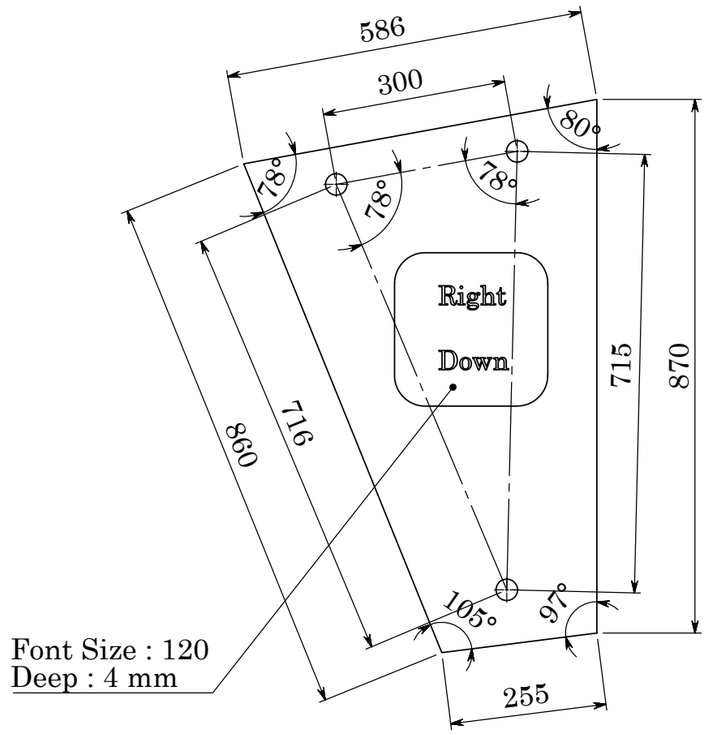

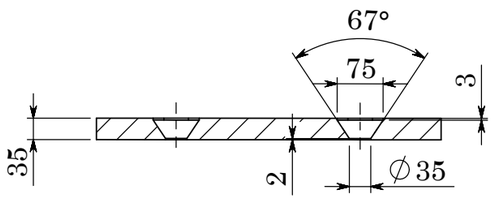

SECTION C-C

UNLESS OTHERWISE SPECIFIED:
DIMENSIONS ARE IN MILLIMETERS
SURFACE FINISH:
TOLERANCES: *DIN 7168*
LINEAR:
ANGULAR:

FINISH:

DEBUR AND
BREAK SHARP
EDGES

دفتر فنی و برنامه ریزی
شرکت سیمان سفید ساوه

بررسی و تایید :	ترسیم :		کد دستگاه : 10-32
	سعید توکلی	نام :	کد کالا : 21101210212
	۱۴۰۰/۰۱/۲۹	تاریخ :	کد کالای مدل : 25531113117
		امضاء :	جنس : 1.3401 + 0.6% Mo + 2% Cr
			تعداد : 1 — (وزن)کیلو :

عنوان نقشه :
لاینر پایین راست سنگ شکن فکی
Down Right - Wear Plate

شماره نقشه : SWC.T-0066	شماره نقشه مرجع : 3C.5871 (Item 118)

SCALE : 1:10 | REVISION : 2 | SHEET 4 OF 5 | A3

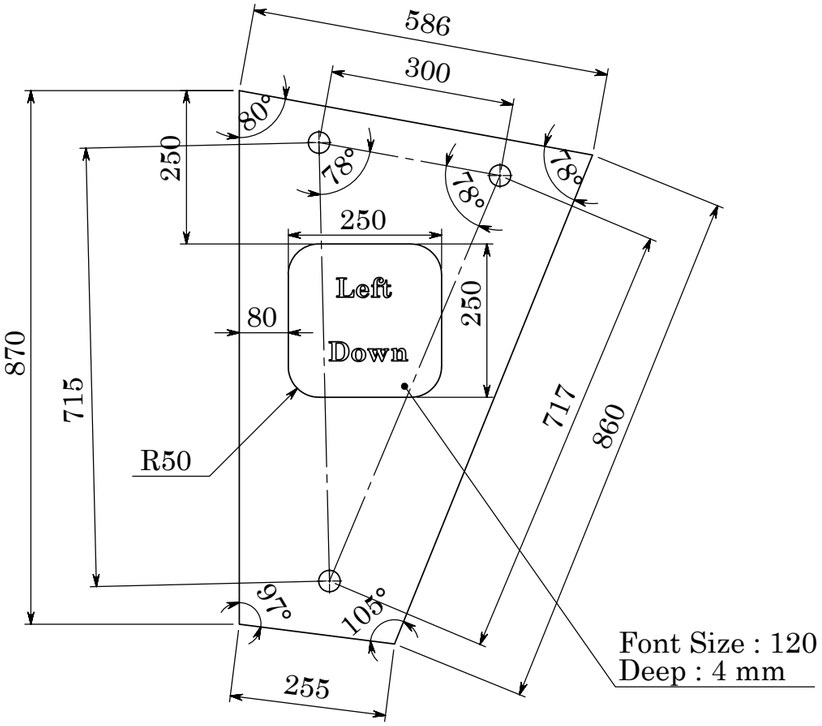

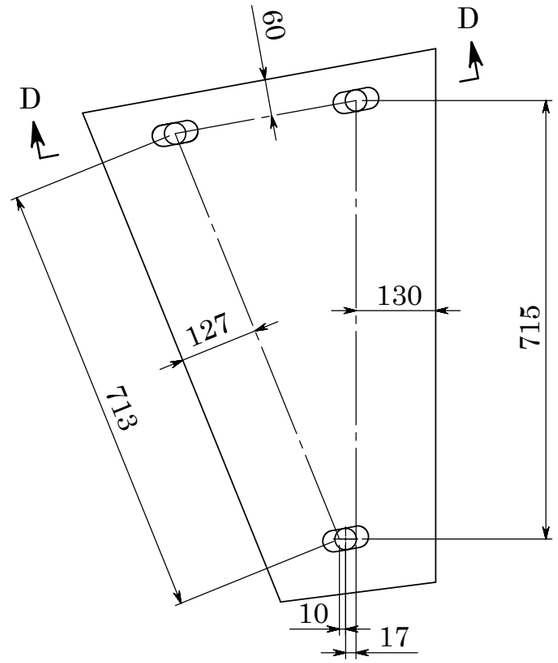

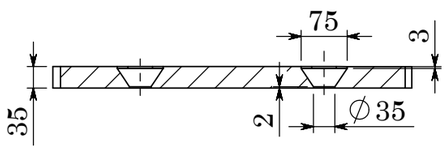

SECTION D-D

UNLESS OTHERWISE SPECIFIED:
DIMENSIONS ARE IN MILLIMETERS
SURFACE FINISH:
TOLERANCES: *DIN 7168*
LINEAR:
ANGULAR:

FINISH:

DEBUR AND
BREAK SHARP
EDGES

دفتر فنی و برنامه ریزی
شرکت سیمان سفید ساوه

بررسی و تایید :	ترسیم :		کد دستگاه : 10-32
	سعید توکلی	نام :	کد کالا : 21101210214
	۱۴۰۰/۰۱/۲۹	تاریخ :	کد کالای مدل : 25531113119
		امضاء :	جنس : 1.3401 + 0.6% Mo + 2% Cr
			تعداد : 1 — وزن (kg):

عنوان نقشه :
لاینر پایین چپ سنگ شکن فکی
Down Left - Wear Plate

شماره نقشه : SWC.T-0066		شماره نقشه مرجع : 3C.5871 (Item 118)	
SCALE : 1:10	REVISION : 2	SHEET 5 OF 5	A3

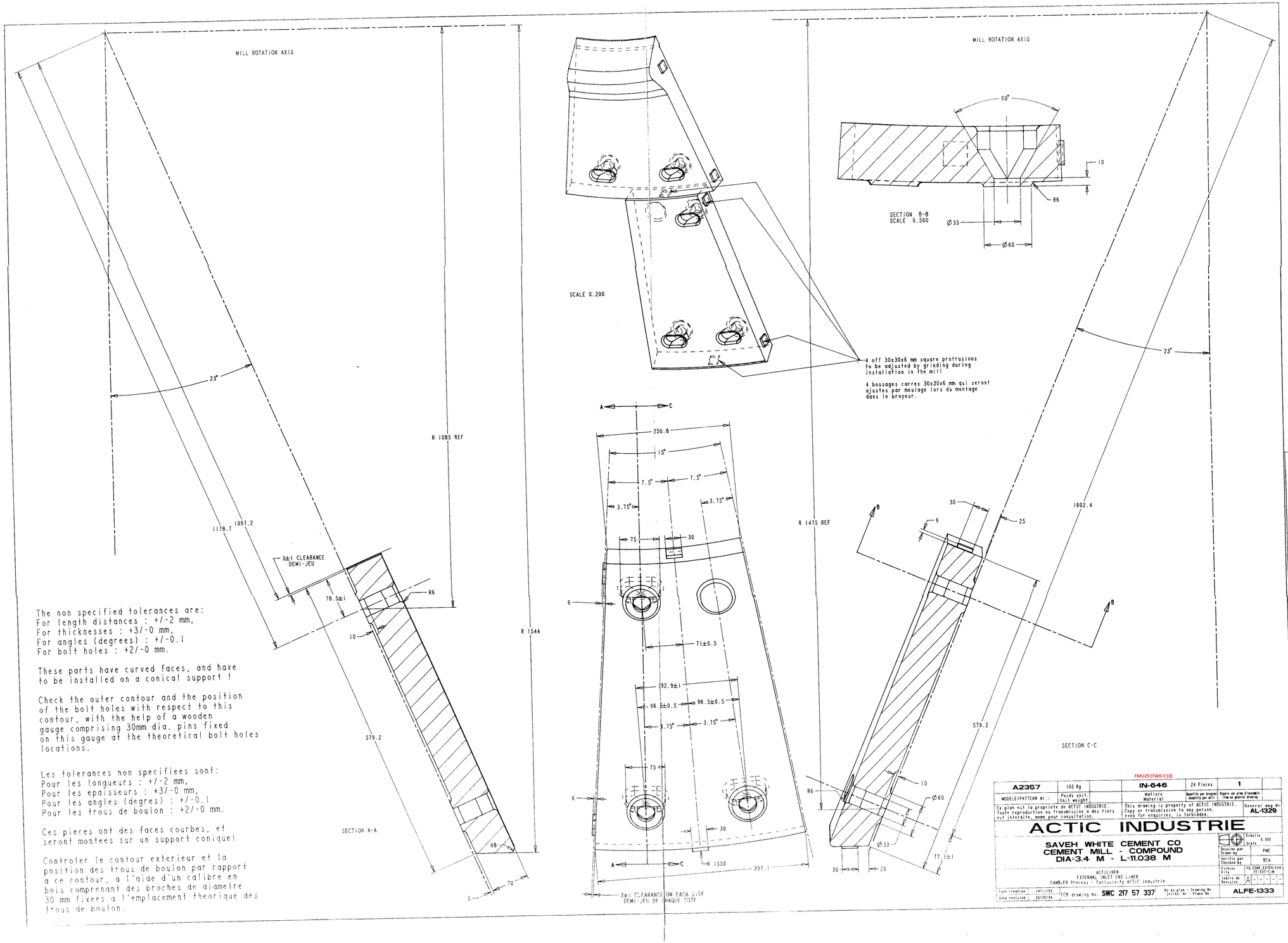

The non specified tolerances are:
For length distances : +/-2 mm,
For thicknesses : +3/-0 mm,
For angles (degrees) : +/-0.1
For bolt holes : +2/-0 mm.

These parts have curved faces, and have to be installed on a conical support !

Check the outer contour and the position of the bolt holes with respect to this contour, with the help of a wooden gauge comprising 30mm dia. pins fixed on this gauge at the theoretical bolt holes locations.

Les tolerances non specifiees sont:
Pour les longueurs : +/-2 mm,
Pour les epaisseurs : +3/-0 mm,
Pour les angles (degres) : +/-0.1
Pour les trous de boulon : +2/-0 mm.

Ces pieces ont des faces courbes, et seront montees sur un support conique!

Controler le contour exterieur et la position des trous de boulon par rapport a ce contour, a l'aide d'un calibre en bois comprenant des broches de diameire 30 mm fixees a l'emplacement theorique des trous de boulon.

FMU29 (TWR-C10)

A2357	103 Kg		IN-646	24 Pieces	1
MODELE/PATTERN Nr.:	Poids unit. Unit weight		Matiere Material	Quantite par broyeur Quantity per Mill	Repere sur plan d'ensemble (Top ou general drawing)

Ce plan est la propriete de ACTIC INDUSTRIE. Toute reproduction ou transmission a des tiers est interdite, meme pour consultation.

This drawing is property of ACTIC INDUSTRIE. Copy or transmission to any person, even for enquiries, is forbidden.

General dwg Nr AL-1329

ACTIC INDUSTRIE

SAVEH WHITE CEMENT CO
CEMENT MILL - COMPOUND
DIA=3.4 M - L=11.038 M

ACTILINER
EXTERNAL INLET END LINER
CAMBLER Process - Factualirity ACTIC Industrie

Date creation 14/11/93
Date revision 20/06/94
FCB drawing No: SWC 217 57 337
No du plan - Drawing No
Schds. Nr - Plans No
ALFE-1333

Echelle Scale 0.333
Dessine par Drawn by FME
Verifie par Checked by BCA
Fichier File FD_CONE_EXTERIEUR FE-CEE-CIM
Indice de Revision A

	DATE	NAME/NOM
DRAWN DESSINE	30/11/93	ROUSSEL
CHECKED VERIFIE	30/11/93	
SIGNED VISE	1/12/93	

DEPART. DCI/BEC
FORMAT A1

SAVEH WHITE CEMENT CO

ISLAMIC REPUBLIC OF IRAN

500 TPD WHITE CEMENT PLANT

RA = SURFACE ROUGHNESS

RA √ RUGOTEST LCA NF E 05-051

CLASS CLASSE	H	12	K	11	M	10	N	9	N	8	N	7	N	6	N	5	N	4	N	3	N	2
RA EN MICRONS / RA EN MICRONS	50	25	12.5	6.3	3.2	1.6	0.8	0.4	0.2	0.1	0.05	
ROUGH AND FLAT SURFACE WITHOUT MACHINING OVERTHICKNESS / SURFACE BRUTE ET UNIE - SANS SUREPAISSEUR D'USINAGE												

LIMITS OF TOLERANCES FOR THE MACHINING DIMENSIONS WITHOUT PARTICULARS (MM)

LIMITES DES TOLERANCES POUR LES COTES D'USINAGE SANS MENTION PARTICULIERE (MM)

FROM DE	0 TO A	6	30	120	400	1000	2000	4000
CUTELIDE EN EXT.	+0 -	0.2	0.4	0.6	0.8	1.6	2.4	4.4
BORE ALESAGE	+ +0	0.2	0.4	0.6	0.8	1.6	2.4	4.4
LENGTH LONG.	+ -	0.1	0.2	0.3	0.4	0.8	1.2	2.2
CT OUST. CONTR'AXE	+ -	0.1	0.2	0.3	0.4	0.8	1.2	2.2

IND REV	NUMBER OF	DATE	DESSINE DRAWN	VERIFIE CHECKED	VISE SIGNED
G					
F					
E					
D					
C					
B					
A		23/06/94	Roussel	Fcb	Drawing redrawn

THIS DRAWING IS THE PROPERTY OF FCB.
IT MUST NOT BE COPIED OR GIVEN TO OTHER PEOPLE WITHOUT FCB'S AGREEMENT
CE DESSIN EST LA PROPRIETE EXCLUSIVE DE FCB.
IL NE PEUT ETRE NI COPIE NI COMMUNIQUE A DES TIERS SANS AUTORISATION

تحت کنترل

GROUP 060 — PLANT: GRINDING MILL

ITEM 060-10 — EQUIPMENT: CEMENT MILL

MATERIAL MATIERE:
MASS MASSE:
PATTERN MODELE:
REFERENCE: ALFE 1333

SCALE ECHELLE

DRAWING TITLE/TITRE DU DESSIN: EXTERNAL INLET END LINER

GROUPE FIVES-LILLE
Etablissement de LILLE
Bd de l'Usine BP 2047 - 59015 LILLE CEDEX FRANCE - Tel (33)20.43.77.77

DOCUMENT NUMBER / NUMERO DE DOCUMENT — TYPE — CLIENT — ITEM

DRAWING NUMBER/NUMERO DE DESSIN: S W C 2 1 7 5 7 3 3 7 A

The non specified tolerances are:
For length distances : +/-2 mm,
For thicknesses : +3/-0 mm,
For angles (degrees) : +/-0.1
Fort bolt holes : +2/-0 mm.

These part have curved faces, and have to be installed on a conical support !

Check the outer contour and the position of the bolt holes with respect to this contour, with the help of a wooden gauge equipped with 2 x 30mm dia. pins fixed on this gauge at the theoretical bolt hole locations.

Les tolerances non specifiees sont:
Pour les longueurs : +/-2 mm,
Pour les epaisseurs : +3/-0 mm,
Pour les angles (degres) : +/-0.1
Pour les trous de boulon : +2/-0 mm.

Ces pieces ont des faces incurvees et doivent etre installees sur un support conique !

Controler le contour exterieur et la position des trous de boulons par rapport a ce meme contour, a l'aide d'un calibre en bois equipe de 2 broches de 30 mm de diametre fixees a la position theorique des trous de boulons.

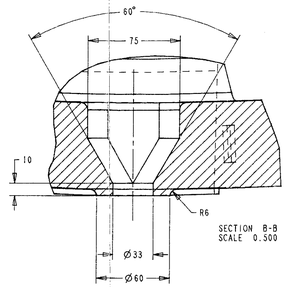

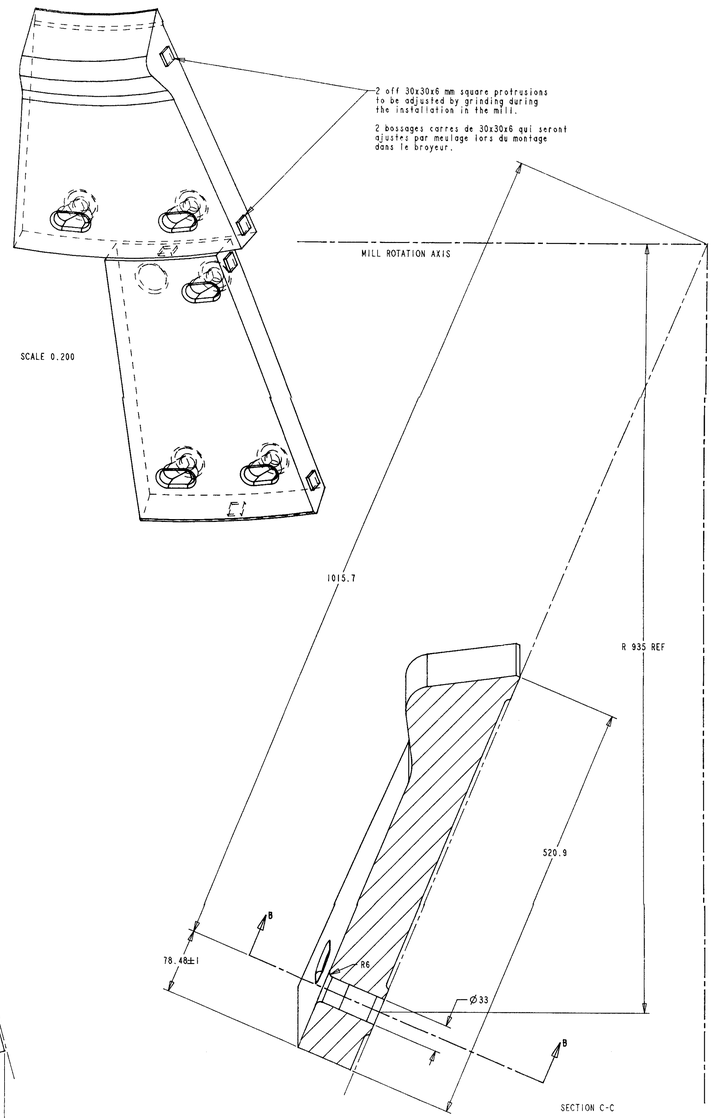

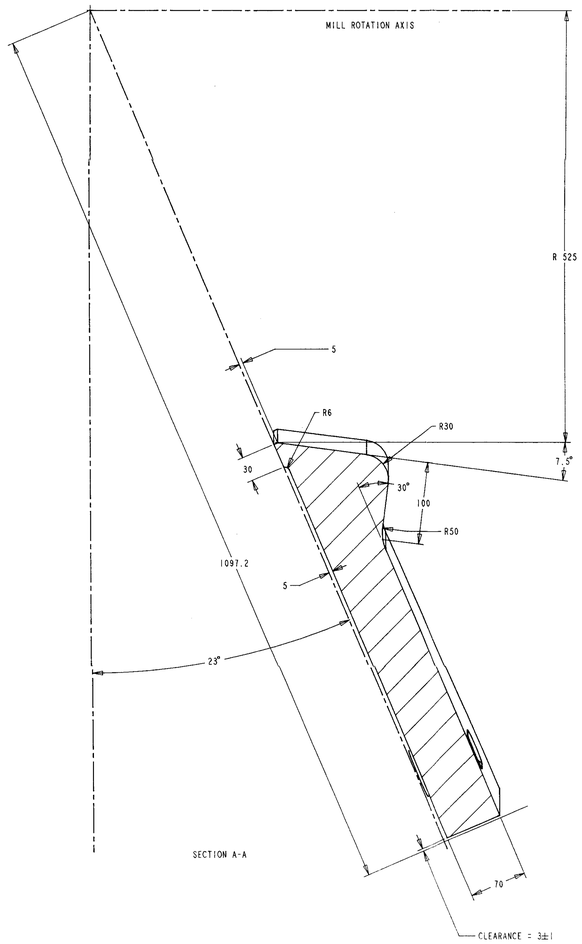

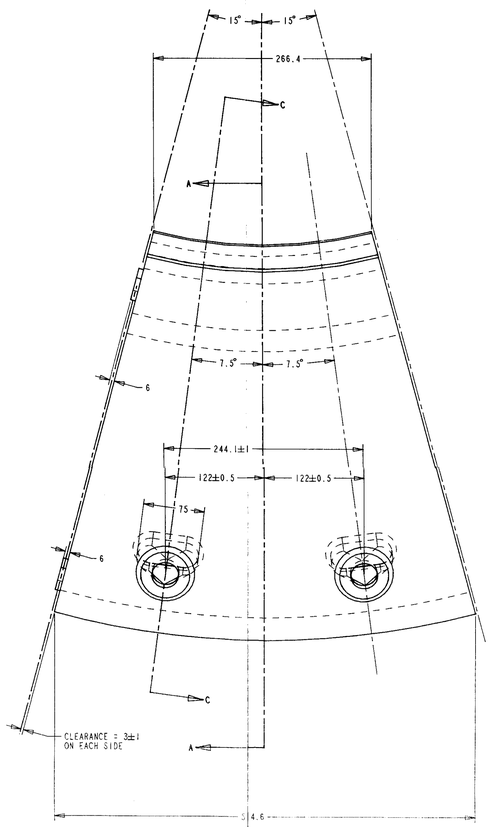

FMU29 (TWR-C10)

A2358	114 Kg		IN-646	12 Pieces	2
MODELE/PATTERN Nr.:	Poids unit. / Unit weight		Matiere / Material	Quantite par Dessin / Quantity per Drawing	Repere sur plan d'ensemble / Item on general drawing

Ce plan est la propriete de ACTIC INDUSTRIE. Toute reproduction ou transmission a des tiers est interdite, meme pour consultation.
This drawing is property of ACTIC INDUSTRIE. Copy or transmission to any person, even for enquiries, is forbidden.

General dwg Nr. AL-1329

ACTIC INDUSTRIE

SAVEH WHITE CEMENT CO
CEMENT MILL - COMPOUND
DIA=3.4 M - L=11.038 M

Echelle / Scale 0.333
Dessine par / Drawn by: PWE
Verifie par / Checked by: BCA
Fichier / File: FD_CONF_INTERIEUR FT-INT-CIM
Indice de Revision: A

ACTILINER
INTERNAL INLET END LINER
CAMBIER Procesus - Exclusivity ACTIC Industrie

Date creation: 14/11/93
Date revision: 20/06/94
FCB drawing No: SWC 217 57 338
No. du plan - Drawing No / Feuille Nr - Plans No: ALFE-1334

SAVEH WHITE CEMENT CO

ISLAMIC REPUBLIC OF IRAN

500 TPD WHITE CEMENT PLANT

RA = SURFACE ROUGHNESS

RA √ RUGOTEST LCA NF E 05-051

CLASS / CLASSE	M	12M	11M	10M	9	8	7	6	5	4	3	2
RA IN MICRONS / RA EN MICRONS	50	25	12.5	6.3	3.2	1.6	0.8	0.4	0.2	0.1	0.05	

ROUGH AND FLAT SURFACE WITHOUT MACHINING OVERTHICKNESS / SURFACE BRUTE ET UNIE - SANS SUREPAISSEUR D'USINAGE

LIMITS OF TOLERANCES FOR THE MACHINING DIMENSIONS WITHOUT PARTICULAR (NAC)

LIMITES DES TOLERANCES POUR LES COTES D'USINAGE SANS MENTION PARTICULIERE (NAC)

FROM / DE	0 A 6	6 A 30	30 A 100	100 A 200	200 A 1000	1000 A 2000	2000 A 4000	4000 A
DIAMETRE ±0 D. EXT	0.2	0.4	0.6	0.8	1.6	2.4	4.4	6.6
BORE ALESAGE + / ±0	0.2	0.4	0.6	0.8	1.6	2.4	4.4	6.6
LENGTH LONG. +	0.1	0.2	0.3	0.4	0.8	1.2	2.2	3.3
LENGTH LONG. −								
CT DIST. / CENTER AXE +	0.1	0.2	0.3	0.4	0.8	1.2	2.2	3.3
CT DIST. / CENTER AXE −								

IND REV	NATURE DE MODIFICATION	DATE	DESSINE DRAWN	VERIFIE CHECKED	VISE SIGNED	
G						
F						
E						
D						
C						
B						
A		23/06/94	Roussel	Edet	Bernot	Drawing Redrawn

THIS DRAWING IS THE PROPERTY OF FCB.
IT MUST NOT BE COPIED OR GIVEN TO OTHER PEOPLE WITHOUT FCB'S AGREEMENT
CE DESSIN EST LA PROPRIETE EXCLUSIVE DE FCB.
IL NE PEUT ETRE NI COPIE NI COMMUNIQUE A DES TIERS SANS AUTORISATION

تحت کنترل

GROUP 060 — PLANT: GRINDING MILL

ITEM 060-10 — EQUIPMENT: CEMENT MILL

MATERIAL MATIERE / MASS MASSE / PATTERN MODELE / REFERENCE: ALFE 1334

SCALE ECHELLE: /

DRAWING TITLE/TITRE DU DESSIN: INTERNAL INLET END LINER

	DATE	NAME/NOM
DRAWN DESSINE	30/11/93	ROUSSEL
CHECKED VERIFIE	30/11/93	Edet
SIGNED VISE	1/12/93	Bernot

DEPART DCI/BEC

FORMAT A1

DOCUMENT NUMBER / NUMERO DE DOCUMENT: TYPE | CLIENT | TITLE | 9

DRAWING NUMBER/NUMERO DE DESSIN: W C 2 1 7 5 7 3 3 8 A

GROUPE FIVES-LILLE

Etablissement de LILLE

BP de l'Usine SP 2047 - 59015 LILLE CEDEX FRANCE - Tel (33)20.43.77.77

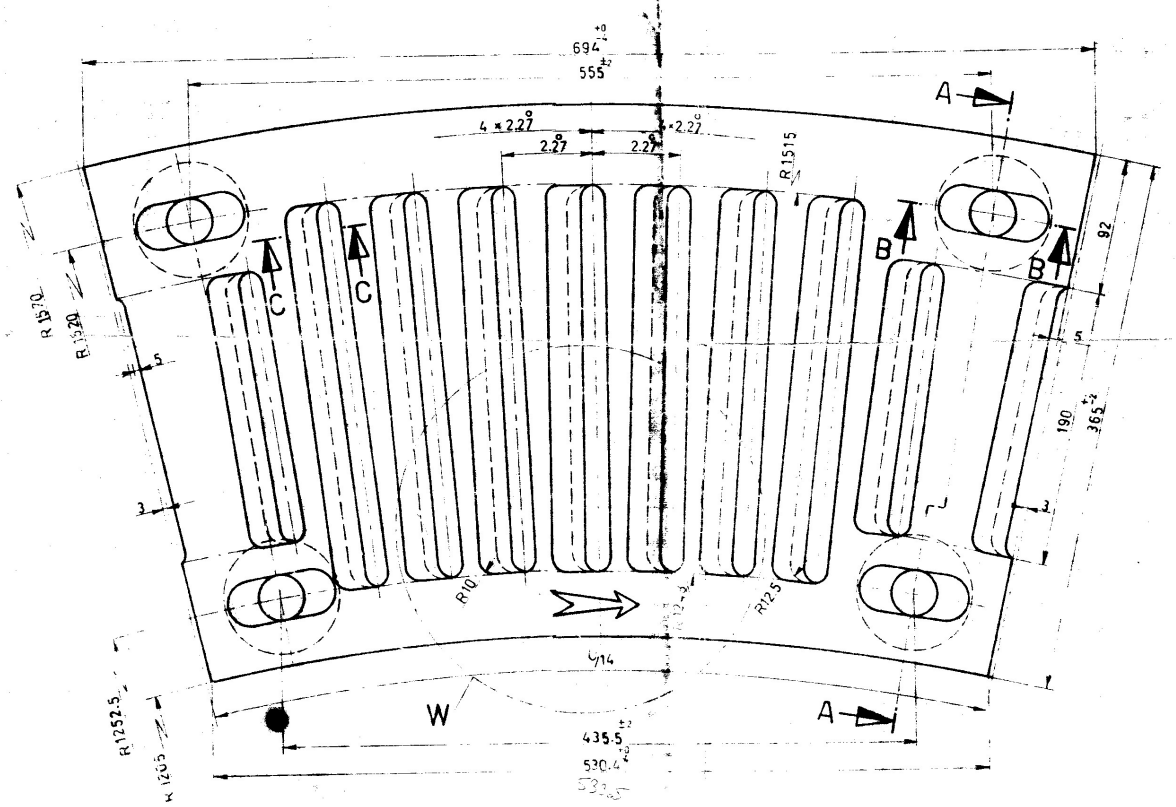

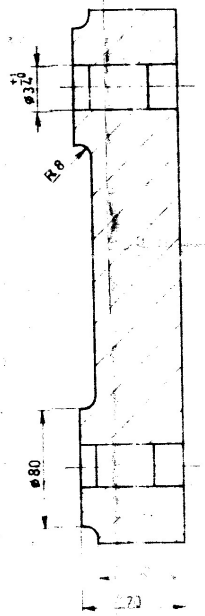

SEC. A – A

DETAIL W

مقطع آیه‌ای می‌باشد

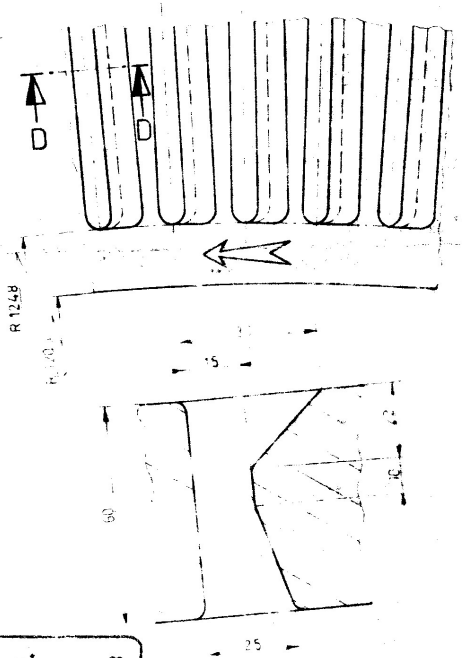

SEC. D – D

تحت کنترل

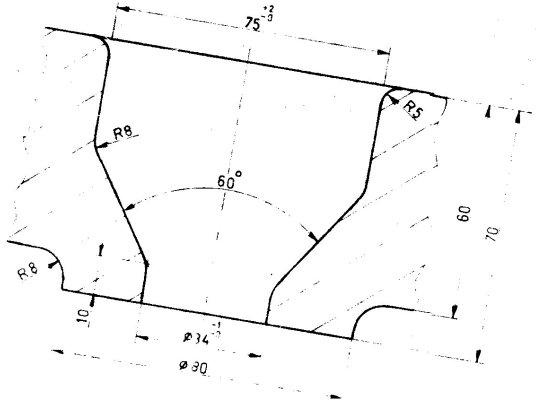

SEC. B – B

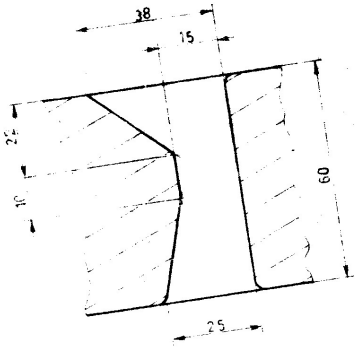

SEC. C – C

NOTE

دهنه فلش بر روی مدل نمی‌باشد

در قسمت شیار که قرینه بوده می‌باشد (W)

فلش و جهت شیار مشخص شده در SEC. C-C بر مبنای جوش

بود و شمارهٔ قطعهٔ آسیای 50036-3420 می‌باشد

توضیح: 145/33

(3417) بر روی مدل در جای مناسب عکس گردد

(3420) در مدل قطعه قرینه عکس گردد.

دفتر فنی کارخانه سیمان سفید ساوه

تاریخ: ۱۳۷۶/۲/۲۰

شماره:

145/34

قسمت‌های دارای نشده R2 می‌باشد

ریخته‌گری فولاد طبرستان

	SIGN	DATE	TITLE:	
DESIGNED			دیافراگم بیرونی	
DRAWN	مرادی	75.3.9		
CHECKED	[illegible]	76.3.16	MATERIAL: 50036-3417 : FMU29 50036-3420 : FMU11	CLIENT: سیمان ساوه
APPROVED				
SCALE: 1:5	DWG. NO. 50036-[illegible]		WEIGHT: [illegible]	QUANTITY: 14

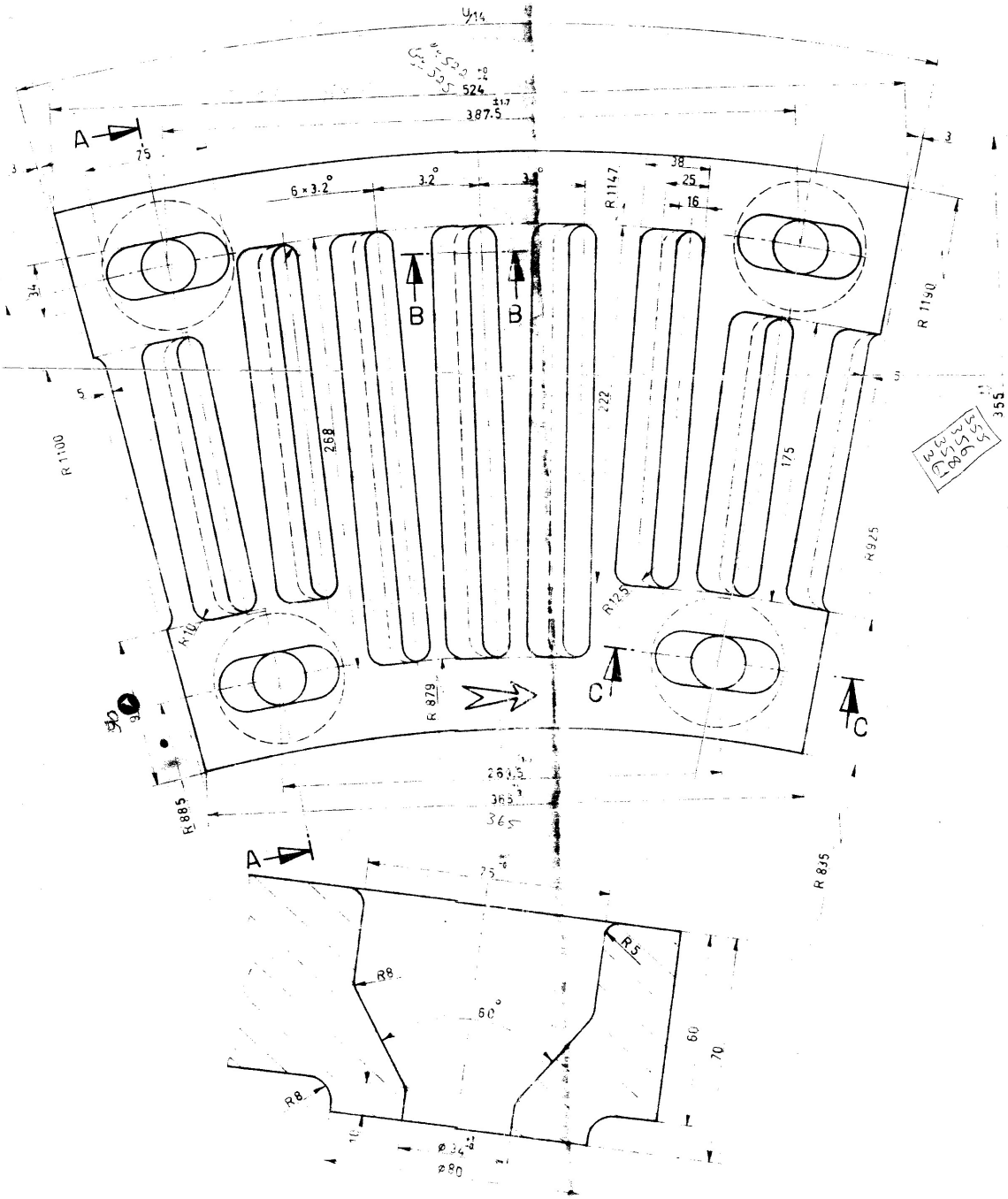

SEC. C-C

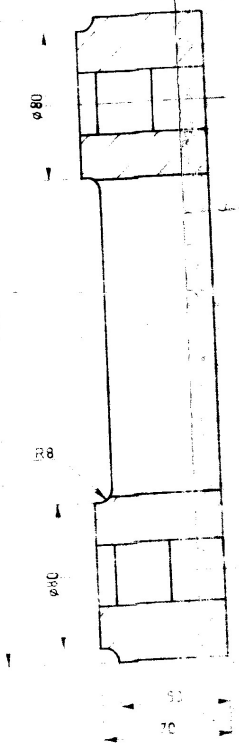

SEC. A-A

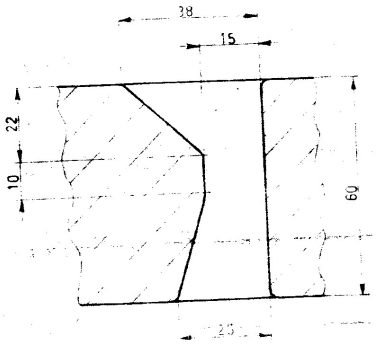

SEC. B-B

NOTE

1- شیب فلش بر روی مدل ضروری می باشد.

2- در قطعه مشابه که قرینه آن نوشته می باشد، جهت فلش، جهت شکاف ورود مواد (SEC. B - B) برعکس خواهد بود و شماره قطعه 50036-3419 می باشد.

145/33

50036-3417 شماره

تحت کنترل

توضیح:

کی قطعه (3416) بر روی مدل درهای سیستم حک گردد.

ضمناً کی (3419) در مدل قطعه قرینه حک شود.

قوس های نشده R2 میباشد

(مرکزی کارخانه سیمان سفید ساوه
تاریخ: ۲۰ /۲/ ۱۳۷۶
شماره:

145/31

ریخته‌گری فولاد طبرستان

	SIGN	DATE	TITLE: دیافراگم میانی	
DESIGNED				
DRAWN	مرادی	75.2.20	MATERIAL: 50036-3416 : FMU29 50036-3419 : FMU11	CLIENT: سیمان ساوه
CHECKED	[illegible]	75.3.16		
APPROVED				
SCALE: 1:2 , 1:1	DWG. NO: 50036-3416,3419		WEIGHT: ≈ 55 kg	QUANTITY: 14